ARISTON

WATER HEATERS & HEAT PUMP WATER HEATERS

HOT WATER | HEATING | RENEWABLE | AIR CONDITIONING

Ariston
ARISTON
ARISTON
ARISTON
ARISTON

COMFORT ALWAYS ON.

For more than 80 years we have been entering the homes of families who choose Ariston with **dedication**, **passion and attention to details**.

This is our source of inspiration to constantly improve ourselves and guide us towards a future made of **sustainable and intelligent comfort**.

Because we believe that our **everlasting quality**, **advanced performance** and **Italian style** can truly improve the quality of life, every day.

/ TODAY
Ariston is a worldwide leading brand in thermic comfort.

/ 1960s-1980s
Ariston brand is launched and the production of electric water heaters begins. During 80s, Ariston has consolidated its market leadership in water heating and the production of boilers begins.

/ 1930s
Aristide Merloni founds “Industrie Merloni” company in the Marche Region of Italy, and starts the production of weighing scales.

ARE YOU READY FOR CHANGE?

The systems of heating and domestic hot water production represent about 30% of the energy consumption in Europe. Through the design (minimum requirements) of eco-friendly products and making aware the end user the technology with higher efficiency, it would have in 2020:

/ **Total annual energy savings of 56 million tonnes of oil**
(Equivalent to the shutdown of heating and hot water of two great nations like Italy)

/ **136 million tons of CO2**
(The absorbing of a forest with a size of the entire central and northern Italy)

Since September 26, 2015 Regulations impose to be compliant with minimum efficiency requirements and energy labeling on products such as boilers, heat pumps, micro-CHP, water heaters and hot water tanks.

The Regulations is valid only for products placed on the market since 09.26.2015; previously purchased and already present in the points of sale or in warehouses of distributors will continue to be sold and installed, although not complying with the new requirements.

26.09.2015	2017	2019
A++ (heating) / **A** (sanitary function) Mandatory labeling for heating and production of hot water products (energy class)	**A+** Introduced in hot water production	**A+++** Introduced in heating
Minimum performance requirements for heating and hot water production	New limits on EFFICIENCY and EMISSIONS	

ENERGY RELATED PRODUCTS

PRODUCT LABEL

There are different labels, depending on the type of product and service guaranteed. The efficiency classes A, A+ and A++ indicate the products with higher performance.

There are two different classifications for the heating and water water production services; for products which can provide both services, labels must show both the classifications.

In addition to the energy class, the labels display information to help consumers choosing the most efficient products with less environmental impact (power consumption in different weather areas noise, etc...).

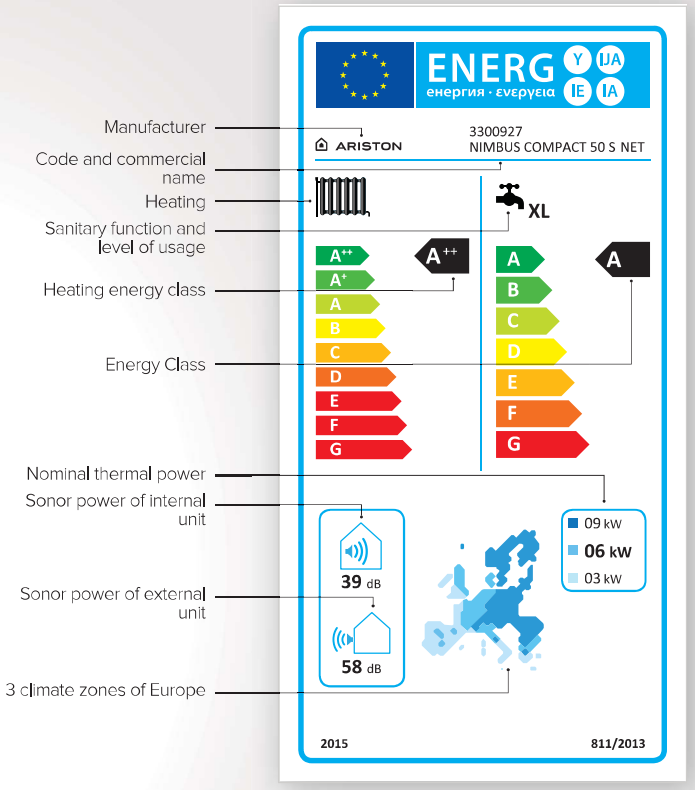

Energy label of a heat pump

SYSTEM LABEL

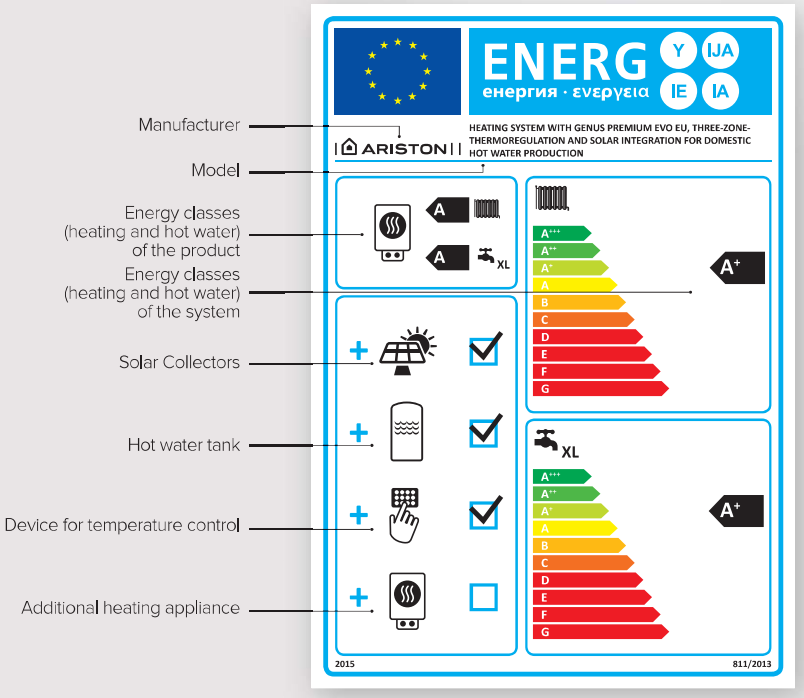

Energy label of a combi boiler

All devices for which it is proposed (or expected) a combination with predefined devices must have a second label in addition to the product label and technical documentation, advertising and promotional materials showing its performance.

Sellers of these systems will be responsibile for defining the achieved performance (through an automatic algorithm) and informing their clients.

Go on ariston.com and use our **online configurator** to achieve, download and print the system label.

www.ariston.com

ARISTON IS WITH YOU

DISCOVER HOW THE WORLD IS CHANGING, ALSO ONLINE.

In ariston.com website you can find all the information on the energy label and ErP regulations.
On the website, together with other technical information, you can find dedicated sections to ErP legislation and discover:

- / What is the energy label and how to read it;
- / **How you can configure and print your label system;**
- / **What are roles and responsibilities** regarding the ErP regulations.

To understand the new legislative framework and to better seize the opportunities, entrusted to the Ariston expertise, the real expert on the subject.
Ariston, in fact, is able to help its customers through valid and clear **consulting technical regulations**, offering products in line with the new regulations.

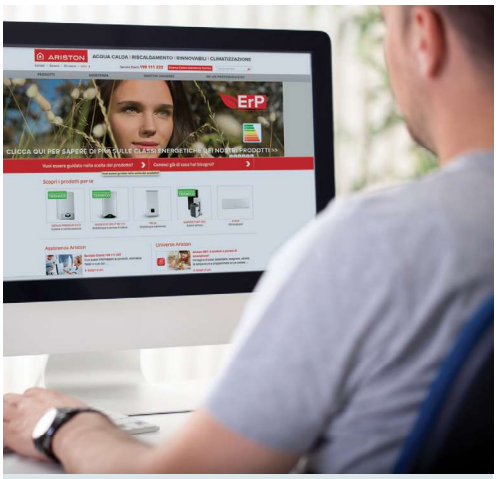

Visit **ariston.com** and our
ONLINE CONFIGURATOR
to make, download
and print the label system

ariston.com

YOUR SYSTEM'S ENERGY LABEL WITH A CLICK.

Thanks to the exclusive service that Ariston provides you, it will be possible to increase the energy class of your system, reaching excellent levels of energy saving.
In a section of our website we provide an on-line tool to help you realizing the system label that you're going to propose.
Simply go on the ariston.com **dedicated ErP area** and enter the configurator.
Once you choose your heating generator (boiler or heating pump) you have to select the other system components.
The configurator will **automatically make the label** ready to be printed and applied to the displayed product, as required by law.

Ariston is always with you, helping you in your business with a simple click.

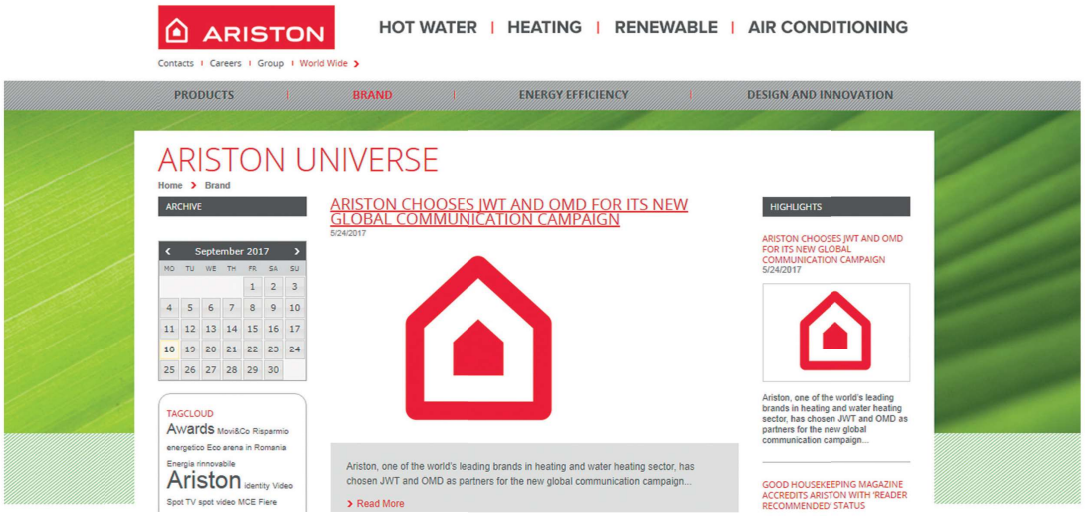

HEAT PUMP WATER HEATERS

THE FUTURE IS ALREADY HERE

**It heats the water using the air.
it offers comfort respecting the environment.**

For many years Ariston has chosen a green path and for this reason it has been investing in the most advanced technology of its sector.
Thanks to the research, we have developed the new heat pump water heaters NUOS. They are efficient and capable of heating a high quantity of water with an extremely low consumption of electricity, as they absorb the heat directly from the external air.

NUOS heat pump water heater range is available both in monoblock and split version (with an external unit), and can be installed both on the wall and on the floor, with a capacity from 80 up to 300 litres.
In the new buildings NUOS range can be used as an alternative to the solar thermal as renewable energy source.

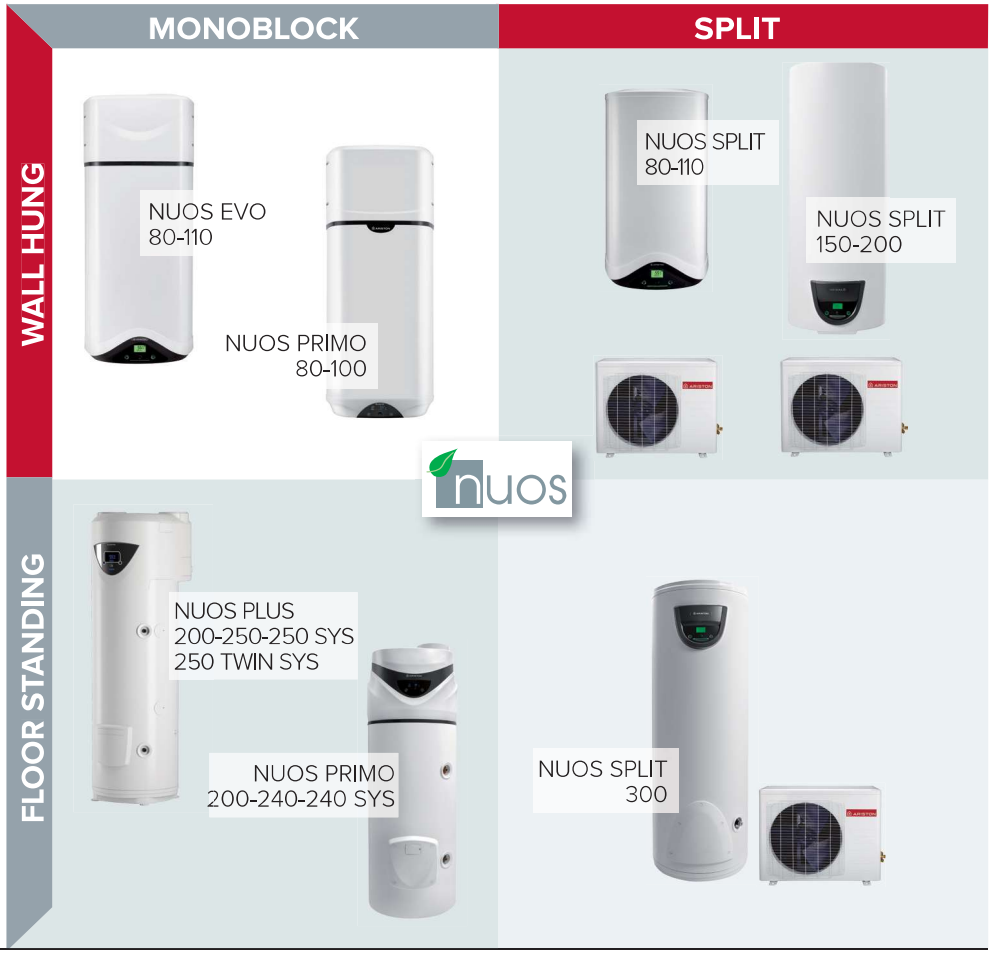

HEAT PUMP TECHNOLOGY

NUOS range uses a thermodynamic cycle to heat the water inside the storage tank through the air sucked by the thermal group inverting the heat natural flow. A refrigerant fluid (R134A), through status changes, compression and expansion cycles, withdraws the heat in the air at low temperature and gives it to domestic water at a higher temperature. This is the reverse mechanism to the one used in refrigerators.
The product electric consumption is only the one necessary to let the fan (that captures the air) and the compressor (that allows the refrigerant fluid to circulate in the system) work.

NUOS ENERGY FORMULA

100 = 25+75

Hot water | Electrical energy | Air heat

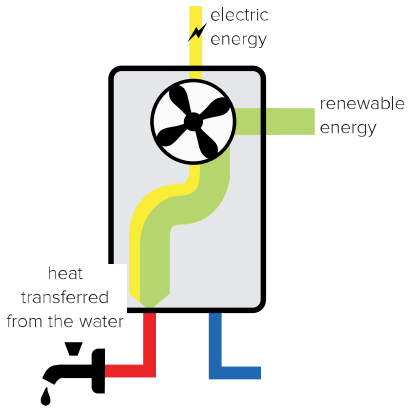

THERMODYNAMIC CYCLE

A-B External air is aspirated inside the heat pump thanks to a fan; when passing through the fins of the evaporator, the air gives its heat and lose 10°C approx. Finally it is expelled.

1 -2 The refrigerant fluid goes through the evaporator and absorbs the heat given by the air.During this process it changes its physical status and evaporate, keeping temperature and pressure almost constant. (0°C ; 5 bar).

2 - 3 The refrigerant fluid crosses the compressor and experiences a pressure rising which involves an increase of temperature. At the end of the process the fluid is overheated vapor and its temperature and pressure are 70°C and 20 bar respectively.

3-4 Within the condenser, the refrigerant fluid gives its heat to the water which warms up. By doing this, the refrigerant condensate at constant pressure (20 bar) and then experiences a significant reduction of temperature. (70 –>40°C).

4-1 The refrigerant fluid passes through the lamination valve, suddenly loose both pressure and temperature and partially evaporate thus returning to the initial conditions of temperature and pressure. (40–>0°C; 5 bar). The thermodynamical cycle can now start over.

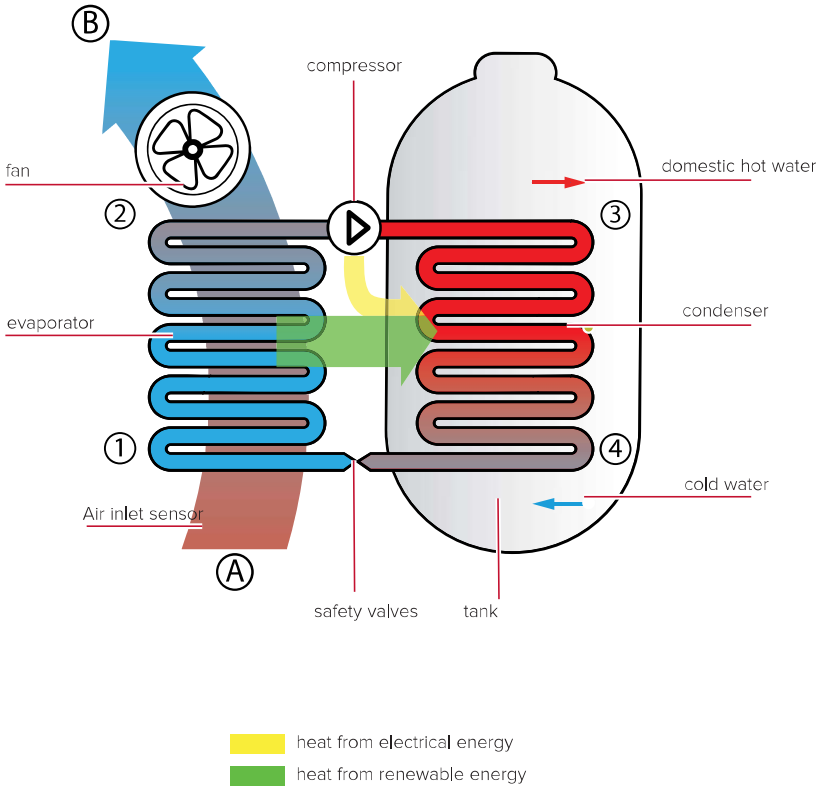

HEAT PUMP WATER HEATER: VERY LOW ENERGY CONSUMPTION, HIGH QUANTITY OF HOT WATER.

A PROFITABLE AND VERSATILE TECHNOLOGY

By absorbing the **free and ecologic** heat directly from the air, the heat pumps are the best example of technology in complete harmony with the environment. The advantages of a heat pump water heater **NUOS** concern not only the ecology but also the lower buying and installation costs, also compared to the solar thermal. For these reasons, today **NUOS** is a really "future-proof" investment. Our versatile technology offers also the possibility to integrate, with **NUOS 250 SYS** model, with any other water heating system, as solar thermal. Can you imagine something more efficient, convenient and **"green"**?

FAMILY FEELING AND FUNCTIONALITY JUST ONE LANGUAGE WITH NUOS

GREEN MODE
Function that maximizes the energy saving. NUOS works only in heat pump mode heating the water up to 62 °C.

BOOST MODE
Function that minimizes the heating time thus increasing the comfort. NUOS works at the same time with the heat pump and the heating element, speeding the water heating up. Once exceeded the maximum working temperature of the heat pump, the heating element keeps heating until the water set-point temperature.

AUTO MODE
Function that guarantees the best compromise between comfort and saving. Nuos optimizes the switching logic of the heat pump and heating element.

ANTILEGIONELLA FUNCTION
This function consists in an automatic disinfection cycles. Every month, NUOS carries out a control and, if necessary, it heats the water up to 65°C, keeping this temperature for a period of time long enough to destroy a possible proliferation of bacteria in the storage tank.

1 ON/OF
2 Display
3 Knob
4 Smile LED
5 Mode

Just one user interface on all models.
A great functionality with an easy
and intuitive control panel.

PROGRAMMING
It is the function that allows to set the time and water temperatures as you want. The device will reach the selected temperature at the set time (you can set up to two hours). The process will give priority to the heating by heat pump and, only if necessary, through the heating elements.

SINGLE-FAMILY SOLUTIONS

DOMESTIC HOT WATER FROM RENEWABLE SOURCE WITH HEAT PUMP WATER HEATER

Heating with condensing wall-hung boiler

up to 300 m²
up to 8 people

Also for big systems
Easy to install
No visual impact

COMPONENT	RANGE
Heat pump water heater	wall-hung from 80 to 110 lt wall-hung split from 80 to 200 floor-standing from 200 to 250-250 SYS floor-standing split 300 lt
Condensing boiler	12 kW 18 kW 24 kW 30 kW

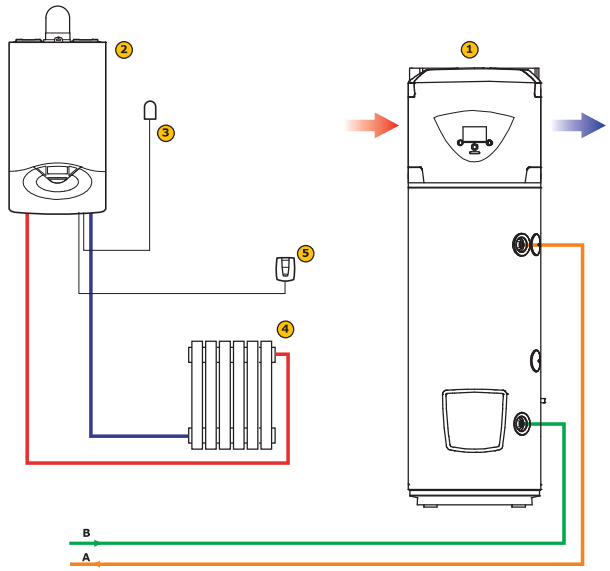

Legend

1. Heat pump
2. Mixed wall-hung boiler
3. Outdoor probe
4. High temperature zone
5. Room sensor zone 1

A Domestic hot water outlet
B Cold water inlet

Arrange an appropriate hydraulic safety group

REAL SIMULATION CASE STUDY:

Basic condition
150 sm house in D class, in Rome.
Gas conventional boiler 25 kW

Renewable solution sizing
- Heat pump water heater 200 litres
- Condensing boiler 24 kW

Results

Total annual
Gas saving **23%**

Annual CO_2 avoided: **kg 389**
Equivalent trees: **32**

Results calculated by energy certification software

NUOS EVO A+

- Operating range in heat pump mode with air temperatures from -5 a 42°C
- Environmentally friendly gas R134A makes it possible to achieve water temperatures up to 62°C in heat pump mode
- Condenser is wrapped around the boiler (not immersed in water)
- Low noise emissions (silent mode)
- Titanium enamelled steel boiler
- Integrated electrical heating elements
- Active anode (protech) + magnesium anode
- LCD Display
- Modes: green, auto, boost, boost 2, voyage and antilegionella modes withdrawal time setting
- Product intended for indoor installation

ENERGY CLASS

A+

TECHNICAL DATA		NEW 80	NEW 110
COP*		2.55	2.45
COP**		2.90	2.70
Heating time*	h:min	05:35	08:04
Seasonal efficiency	%	105	102
Min/max air temperature	°C	-5/42	-5/42
Max. water temperature heat pump only mode/with R	°C	62/75	62/75
Sound power****	dB(A)	50	50
Average electrical power consumption in heat pump mode	W	250	250
Maximum electrical power consumption in heat pump mode	W	350	350
Maximum quantity of domestic hot water at 40°C*	l	85	128
Nominal storage tank capacity	l	80	110
Maximum operating pressure	bar	8	8
Voltage/Max. power consumption	V/W	220-240/1550	220-240/1550
Heating element power	W	1200	1200
Standard air flow rate	m^3/h	100-200	100-200
Minimum volume of room of installation***	m^3	20	20
Empty weight	kg	50	55
Grade of protection of the electrical system		IP24	IP24
Insulation thickness	mm	41	41
Diameter of water connections	"	1/2 M	1/2 M
Minimum Temperature of storage tank room	°C	1	1
Heat dispersion (Pes)*	W	17	17
Available static pressure	Pa	65	65

F-GAS DATA			
Type of refrigerant		R-134A	R-134A
Refrigerant charge	g	550	550
GWP		1430	1430
CO2 equivalents	t	0.72	0.72

CODE			
ErP		3629056	3629057
	Erp class	A+	A+
	Tapping profile	M	M

The capacity indicated in this catalogue identifies the product category. The effective capacity of the product is given in the relevant technical documentation provided with the product.

* Values obtained with outdoor air temperature 7 °C and relative humidity 87%, inlet water temperature 10 °C and temperature set 55 °C for A models and 53 °C for A+ models (as per the provisions of EN 16147). Ducted product Ø150 rigid.
** Values obtained with outdoor air temperature 14 °C and relative humidity 87%, inlet water temperature 10 °C and temperature set 55 °C for A models and 53 °C for A+ models (as per the provisions of EN 16147). Ducted product Ø150 rigid.
***Refers to non-ducted product
****Values obtained from the average of three tests performed with outdoor air temperature 7 °C and relative humidity 87%,
inlet water temperature 10 °C and temperature set in accordance with the provisions of 2014/C 207/03 - transitional methods of measurement and calculation and EN 12102. Ducted product Ø150 rigid.

ENERGY EFFICIENT | ANTI-CORROSION | ANTI-LEGIONELLA | ANTI-FREEZING

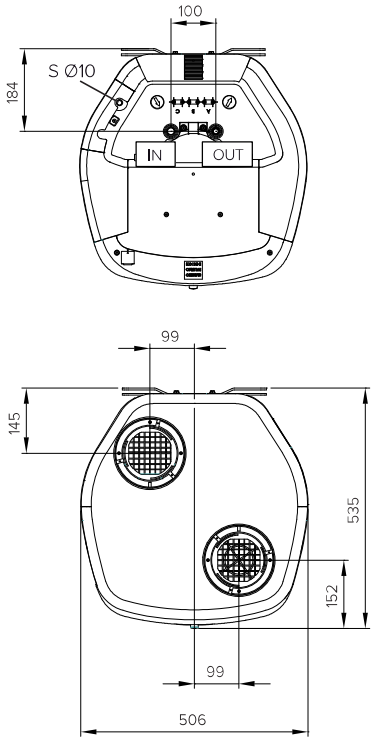

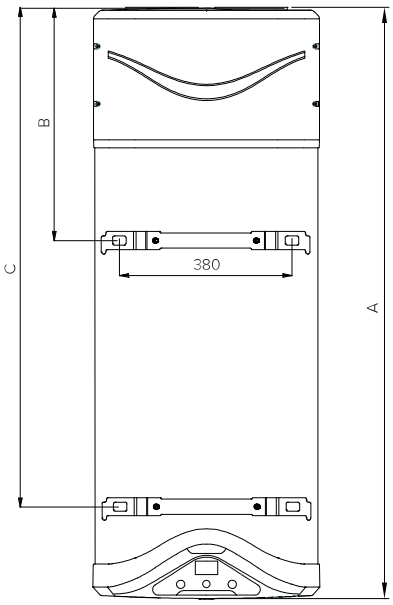

Dimensions

	80	110
A mm	1171	1398
B mm	515	515
C mm	890	1117

S condensate drain Ø10mm
IN cold water inlet G 1/2"
OUT hot water outlet G 1/2"

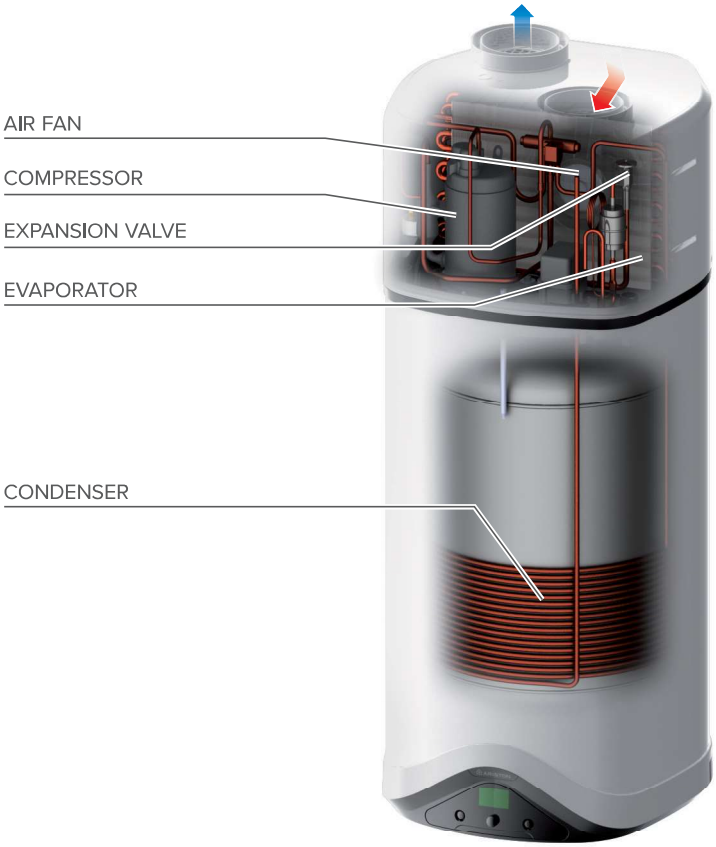

NUOS PRIMO

- Operating range in heat pump mode with air temperature from -5 to 42 °C
- Environmentally friendly gas R134A makes it possible to achieve water temperatures up to 62 °C in heat pump mode
- Condenser is wrapped around the boiler (not immersed in water)
- Titanium enamelled steel boiler
- Immersed electric heating element
- Active anode (protech) + magnesium anode
- LCD Display
- Modes: green, auto, boost and antilegionella modes, withdrawal time setting
- Coil and sensor slot for solar energy integration or boiler (NUOS PRIMO 240 SYS)
- Integrated transportation straps
- Product intended for indoor installation

ENERGY CLASS

A

TECHNICAL DATA		200	240	240 SYS
COP*		2.41	2.64	2.64
COP**		2.93	2.93	2.93
Heating time*	h:min	07:45	09:33	09:33
Seasonal efficiency (average climate)	%	101	109	109
Min/max air temperature	°C	-5/42	-5/42	-5/42
Max. water temperature heat pump only mode/ with R	°C	55/75	55/75	55/75
Sound power****	dB(A)	53	53	53
Average electrical power consumption	W	500	500	500
Maximum quantity of domestic hot water at 40°C*	l	284	348	348
Nominal storage tank capacity	l	200	242	238
Maximum operating pressure	bar	6	6	6
Voltage/Max. power consumption	V/W	220-230/2750	220/2670	220/2670
Heating element power	W	2000	2000	2000
Standard air flow rate	m^3/h	400	400	400
Minimum volume of room of installation***	m^3	20	20	20
Empty weight	kg	87	92	107
Grade of protection of the electrical system		IP24	IP24	IP24
Insulation thickness	mm	35	35	35
Diameter of water connections	"	3/4 M	3/4 M	3/4 M
Minimum Temperature of storage tank room	°C	1	1	1
Heat exchanger surface	m^2	-	-	0.65
Heat dispersion (Pes)*	W	36	44	44
Available static pressure	Pa	53	53	53

F-GAS DATA				
Type of refrigerant		R-134A	R-134A	R-134A
Refrigerant charge	g	900	900	900
GWP		1430	1430	1430
CO2 equivalents	t	1.29	1.29	1.29

CODE			
ErP	3079008	3079009	3079010
Erp class	A	A	A
Tapping profile	L	XL	XL

* Values obtained with outdoor air temperature 7 °C and relative humidity 87%, inlet water temperature 10 °C and temperature set 55 °C (as per the provisions of EN 16147). Ducted product Ø150 rigid.
** Values obtained with outdoor air temperature 14 °C and relative humidity 87%, inlet water temperature 10 °C and temperature set 55 °C (as per the provisions of EN 16147). Ducted product Ø150 rigid.
***Refers to non-ducted product
**** Values obtained from the average of three tests carried out with an air temperature of 7°C and 87% relative humidity, inlet water temperature 10°C and temperature setting in accordance with the provisions of 2014/C 207/03 - transitional methods of measurement and calculation and EN 12102. Ducted product Ø200 rigid.

The capacity indicated in this catalogue identifies the product category. The effective capacity of the product is given in the relevant technical documentation provided with the product.

ANTI-CORROSION | ANTI-LEGIONELLA | ANTI-FREEZING | SOLAR INTEGRATION

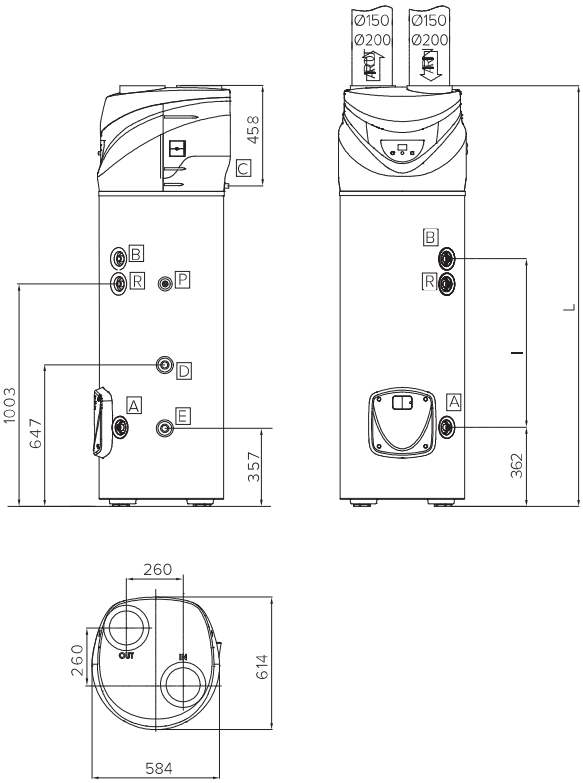

Dimensions

	200	240 (SYS)
l mm	551	771
L mm	1706	1926

A Pipe Ø ¾" cold water inlet
B Pipe Ø ¾" hot water outlet
C Condensate discharge connection Ø ½" F
D Pipe Ø ¾" coil inlet (240 SYS)
E Pipe Ø ¾" coil outlet (240 SYS)
P Probe socket (240 SYS)
R Ricircle Ø ¾" (240 SYS)

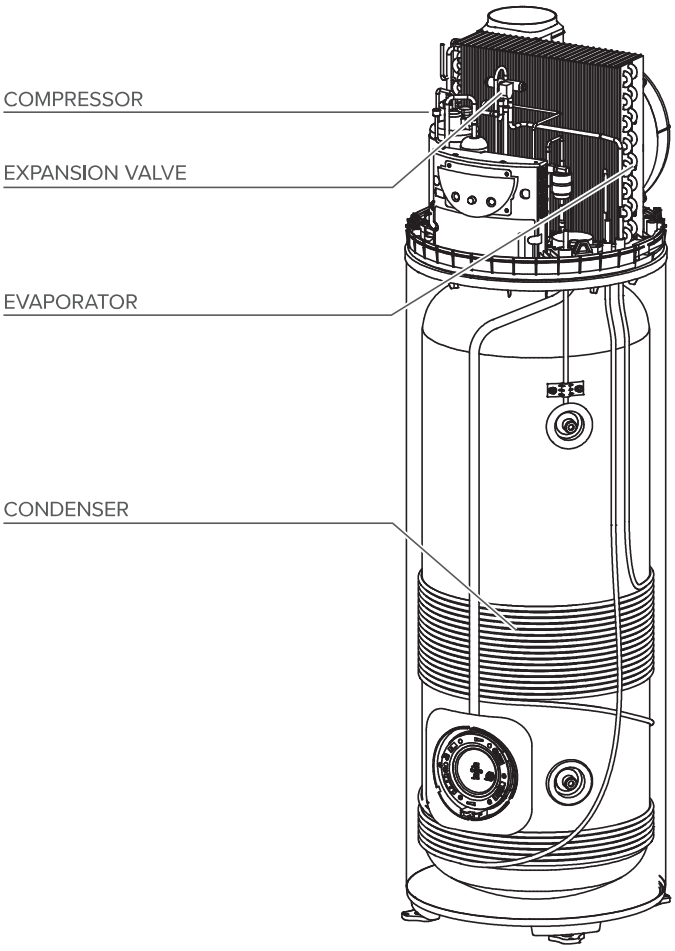

NUOS PLUS THE REVOLUTION OF HEAT PUMP WATER HEATERS

COMFORT, SAVING, GREEN

4h30min
LOWEST HEATING TIME ON THE MARKET*

80%
ENERGY SAVING COMPARED TO TRADITIONAL WATER HEATERS OF THE SAME CAPACITY

3,35
COP
HIGHEST ON THE MARKET**

* refers to NUOS PLUS 200
** refers to NUOS PLUS 250 with air T of 7°C (EN16147)

MADE IN ITALY DESIGN AND MAXIMUM EFFICIENCY

/ SIMPLE INSTALLATION
Simple installation and maintenance as a result of the newly optimised design and facilitated access to all components

/ SUPER SILENCE MODE
To minimise noise during the night

/ AN EVEN MORE INTUITIVE DISPLAY
The number of showers quantifies, in real time, the amount of domestic hot water available

/ EXTREMELY EFFICIENT
The highest COP on the market provides maximum electrical energy savings

/ INTEGRATION WITH PHOTOVOLTAICS
Dedicated function to fully utilize energy produced by a photovoltaic system

/ INTEGRATION WITH OTHER GENERATORS
Integration with solar heating and boiler via the new COMBI and SYSTEM modes (SYS and TWIN SYS models only)

NUOS PLUS

ENERGY CLASS

A+

/ Operating range in heat pump mode with air temperatures from -7 to 42°C
/ Environmentally friendly gas R134A makes it possible to achieve water temperatures up to 62°C in heat pump mode
/ Condenser is wrapped around the boiler (not immersed in water)
/ Titanium enamelled steel boiler
/ Dual power steatite electrical heating elements
/ Active anode (protech) + magnesium anode
/ LCD Display
/ Modes: green, auto, boost, boost 2, voyage and antilegionella modes withdrawal time setting
/ One or two coils and sensor slots to integrate solar, boiler or biomass (NUOS PLUS 250 SYS and TWIN SYS)
/ Domestic hot water recirculation (NUOS PLUS 250 SYS and TWIN SYS)
/ Integrated photovoltaic function
/

Possibility of external load activation
/ Optimised combined or heating only boiler operation
/ Product intended for indoor installation

TECHNICAL DATA		200	250	250 SYS	250 TWIN SYS
COP*		3.05	3.35	3.14	3.21
COP**		3.28	3.64	3.54	3.54
Heating time*	h:min	04:30	05:23	05:29	05:43
Seasonal efficiency (average climate)	%	126	137	129	132
Min/max air temperature	°C	-7/42	-7/42	-7/42	-7/42
Max. water temperature heat pump only mode/with R	°C	62/75	62/75	62/75	62/75
Sound power****	dB(A)	55	55	55	55
Sound power (Silent mode)	dB(A)	52	52	52	52
Average electrical power consumption	W	700	700	700	700
Maximum quantity of domestic hot water at 40°C*	l	273	346	345	345
Nominal storage tank capacity	l	200	250	245	240
Maximum operating pressure	bar	6	6	6	6
Voltage/max. power consumption	V/W	220-240/2500	220-240/2500	220-240/2500	220-240/2500
Heating element power	W	1500+1000	1500+1000	1500+1000	1500+1000
Standard air flow rate (automatic modulation)	m^3/h	700	700	700	700
Minimum volume of room of installation***	m^3	30	30	30	30
Empty weight	kg	90	95	115	130
Grade of protection of the electrical system		IPX4	IPX4	IPX4	IPX4
Insulation thickness	mm	50	50	50	50
Diameter of water connections	"	3/4 M	3/4 M	3/4 M	3/4 M
Minimum Temperature of storage tank room	°C	1	1	1	1
Heat exchanger surface	m^2	-	-	0.65	0.65+0.65
Heat dispersion (Pes)*	W	23	22	24	26
Available static pressure	Pa	110	110	110	110

F-GAS DATA					
Type of refrigerant		R-134A	R-134A	R-134A	R-134A
Refrigerant charge	g	1300	1300	1300	1300
GWP		1430	1430	1430	1430
CO2 equivalents	t	1.86	1.86	1.86	1.86

CODE					
ErP		3079052	3079053	3079054	3079055
	Erp class	A+	A+	A+	A+
	Tapping profile	L	XL	XL	XL

* Values obtained with outdoor air temperature 7 °C and relative humidity 87%, inlet water temperature 10 °C and temperature set 55 °C (as per the provisions of EN 16147). Ducted product Ø150 rigid.
** Values obtained with outdoor air temperature 14 °C and relative humidity 87%, inlet water temperature 10 °C and temperature set 55 °C (as per the provisions of EN 16147). Ducted product Ø150 rigid.
***Refers to non-ducted product
****Values obtained from the average of three tests performed with outdoor air temperature 7 °C and relative humidity 87%, inlet water temperature 10 °C and temperature set in accordance with the provisions of 2014/C 207/03 - transitional methods of measurement and calculation and EN 12102. Ducted product Ø200 rigid.

The capacity indicated in this catalogue identifies the product category. The effective capacity of the product is given in the relevant technical documentation provided with the product.

INTEGRATION WITH PHOTOVOLTAIC SYSTEM | ENERGY EFFICIENT | ANTI-CORROSION | ANTI-LEGIONELLA | ANTI-FREEZING | SOLAR INTEGRATION

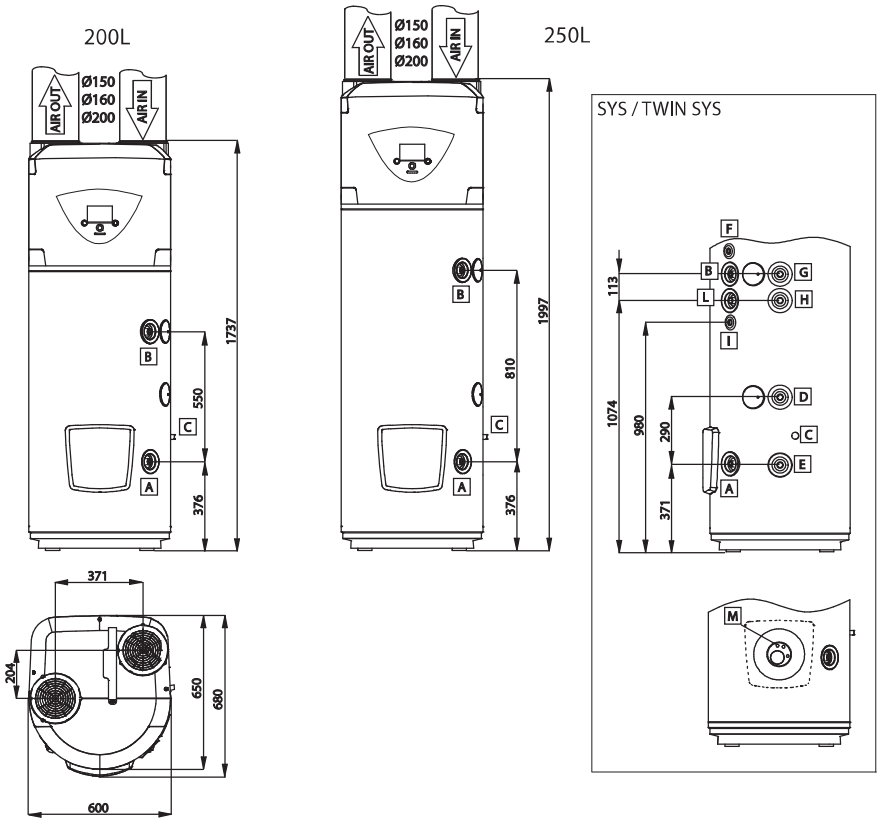

A Pipe Ø ¾" cold water inlet
B Pipe Ø ¾" cold water outlet
C Condensate drainage connection Ø14mm
D Pipe Ø ¾" auxiliary circuit inlet (SYS and TWIN SYS versions only)
D Pipe Ø ¾" auxiliary circuit outlet (SYS and TWIN SYS versions only)
F Sheath for upper sensor (S3) (SYS and TWIN SYS versions only)
G Pipe Ø ¾" auxiliary circuit inlet (TWIN SYS version only)
H Pipe Ø ¾" auxiliary circuit outlet (TWIN SYS version only)
I Sheath for upper sensor (S4) (TWIN SYS version only)
L Pipe Ø ¾" for recycling circuit (SYS and TWIN SYS versions only)
M Sheath for lower sensor (S2) (SYS and TWIN SYS versions only)

INTEGRATED SYSTEM

NUOS PLUS 200 / 250 PHOTOVOLTAIC BOILER

NUOS PLUS 250 SYS PHOTOVOLTAIC BOILER SOLAR HEAT BIOMASS

NUOS PLUS 250 TWIN SYS PHOTOVOLTAIC BOILER SOLAR HEAT BIOMASS