VistaClad

Cladding inspired by nature

INFINITY VISTACLAD TECHNICAL DATA SHEET

VERSION H1.0 | 21/07/2027

Scan this QR code to download the latest version of this document

www.eva-last.com

A PRODUCT BY EVA-LAST®

INSPIRED BY NATURE, DESIGNED FOR LIFE.

Contents

Document guide 3
Material composition 5
Physical properties 6
Mechanical properties 7
Thermal properties 9
Fire reaction properties 9
Weathering 10
System components 11
System properties 17
Disclaimer and copyright 19
Appendix A - Profiles details 20
Appendix B - System component 22
Appendix C - Material compatibility 32

VistaClad Infinity

The VistaClad lightweight bamboo composite cladding system is revolutionising how cladding works with an innovative clip strip which locks boards into place using reliable dual clip technology. VistaClad is available in a range of colours and finishes, as a complete cladding system with optional trim and accessories, and designed for ease of installation. Backed by an industry-leading warranty, this low-maintenance, weather resistant cladding is a smart, cost-efficient investment in your project, and a sustainable investment in our planet.

Product name:	VistaClad
Product use:	Primarily used in cladding, façades, screens, and similar applications
Material:	Infinity
Material description:	Co-extruded profiles with a cellulose-polymer composite core

Document guide

Eva-Last strives to evaluate their products in depth and present the technical and safety information available in a manner that assists with the application thereof. If additional data or information is required, please do not hesitate to contact us at rad@eva-last.com.

In an attempt to simplify the information, similar data is loosely grouped into the categories summarised below. This document is ordered according to these categories and the applicable page number for the start of each section captured in the Table of contents on page above.

- Material
- Physical properties
- Mechanical properties
- Thermal properties
- Fire reaction properties
- Weathering properties
- Surface properties

The material compositions section captures a summary of the product make-up from the Material Safety Data Sheet (MSDS). A link to the MSDS is provided for additional detail. Summaries of chemical compliance data available are also collected in this section.

The physical properties section provides a summary of available profiles and general material properties such as density, water absorption, etc. Additional profile information can be obtained from drawings in the appropriate Appendix A. Where possible, material properties that can be assigned to more specific categories are moved to the relevant section.

The mechanical properties section captures data related to the products reaction to various load conditions. The section is broadly assembled into the below categories. Additional profile and sectional information are captured by the drawings in the appropriate Appendix.

- Material specific mechanical properties
- Profile specific mechanical properties
- Sectional properties

Product properties such as the expansion coefficient, thermal resistance, etc. are captured, where applicable, in the thermal properties section.

Information regarding the product's reaction to fire is captured in the fire reaction properties section.

Test data relating to the acoustic performance of the product is summarised in the acoustic properties section.

Information on the products resistance to mold, termites, etc. is collected in the biodegradation properties section.

The surface properties section summarises information regarding the finish or texture of the product. Test data on aspects such as slip resistance (where applicable) is captured in this section.

Where the products form part of a system and, as a result, utilise other components, an additional section to capture useful data regarding these components has been added to this document.

Where information is not yet available, the section has been omitted. In the cases where information can be substituted or supplemented with alternative data (based on similar compositions, etc.) an attempt to do so is made. Where this is the case, it is highlighted. Please make use of the data accordingly. For any additional information regarding this, please feel free to contact rad@eva-last.com.

Ensure the product and application thereof is suitable, rational, and compliant with any applicable regulations or standards. Wherever necessary, consult a suitably qualified professional. For information about the installation and use of the product, please see the applicable Installation Guide (IG). For additional material safety and handling information, please refer to the applicable MSDS. For any further information, please contact rad@eva-last.com.

Material composition

The following table is a simplified material composition for Infinity technology. For more information regarding the composition, safety, and handling of the material, please see the Infinity MSDS. To confirm which substances are compatible, or incompatible, with the product, please refer to **Appendix C**.

Component	Substance	Weight percentage
Cap and core	Polyethylene (PE)	28
	Cellulose fibre (Bamboo fibres)	62
	Calcium carbonate	4
Additional additives	Other	6

Material Compliance

Infinity has been assessed to determine whether it contain Substances of Very High Concern (SVHC) that may be classified as carcinogenic, mutagenic, or toxic to reproduction of humans or animals, or have a persistent, cumulative, or negative impact on the environment in accordance with European REACH (Registration, evaluation, and authorization of chemicals) regulations.

Compliance report	Result	Issue date	Compliance body	Information
SVHC compliance	Pass	2019-06	EU REACH	Of the 197 substances evaluated, non-have been detected. SVHC concentration require detection levels of less than 0.05% of the whole product. See this **link** for the full list of substances.

Environmental Product Declaration

An Environmental Product Declaration is available for Sentai co-extrusion products. Its applicability to Infinity and the listed Revive profiles should be confirmed against the EPD product scope. The EPD presents independently verified life-cycle environmental data in accordance with ISO 14025 and EN 15804+A2. Applicability should be confirmed against the product scope of the declaration. Environmental Product Declaration for Co-extrusion Product, EPD registration **EPD-IES-0016522**, The International EPD® System.

Declaration details

Property	Result	Notes
EPD registration number	EPD-IES-0016522	International EPD® System
Programme operator	EPD International AB	
Publication date	27 September 2024	
Valid until	26 September 2029	Subject to continued registration
Declared unit	1 kg of co-extrusion product	Packaging excluded
Production location	Guangde County, Anhui Province, China	Manufacturing site covered by modules A1–A3

Applicable distribution scenarios

The EPD applies global assumptions for installation and end-of-life stages. Distribution scenarios are based on modelled transport from China to the stated regions.

Region	Distribution share used in EPD	Notes
Europe	65%	Included in module A4
United States	20%	Included in module A4
Asia	15%	Included in module A4

Selected environmental indicators

Results are reported per declared unit of **1 kg of co-extrusion produc**t. For the full declaration please see the full EPD.

Indicator	A1–A3 result	Unit
Global warming potential — total	−0.0756	kg CO_2e
Global warming potential — fossil	1.08	kg CO_2e
Global warming potential — biogenic	−1.16	kg CO_2e
Acidification potential	0.00530	mol H^+ eq.
Freshwater eutrophication potential	0.000240	kg P eq.
Fossil resource use	14.9	MJ
Water deprivation potential	0.182	m^3

Physical properties

General material properties

Typical properties of the Infinity material technology are captured below as an indication of the expected behaviour of the Infinity material.

Properties	Results	Requirement	Test method	Information
Density	1 250 to 1 300 kg/m^2 (256.04 to 266.29 lb/ft ^{2})		EN 15534-1	Based on tests performed upon STGJOTG01
Moisture content	0.2%	Less than 5%	EN 15534-1 for 28 days	Infinity materials were evaluated for water absorption properties in accordance with the test method listed to determine dimensional stability. See the report **here** for further details.
Water absorption (Mass)	0.6%	Less than 7%		
Thickness swell (Dimensional)	0.2%	Less than 5%		
Length swell (Dimensional)	0.1%	Less than 0.6%		
Width swell (Dimensional)	0%	Less than 1.2%		

Profile properties

The following table is a summary of the currently available profiles, please see **Appendix A** for profile drawings.

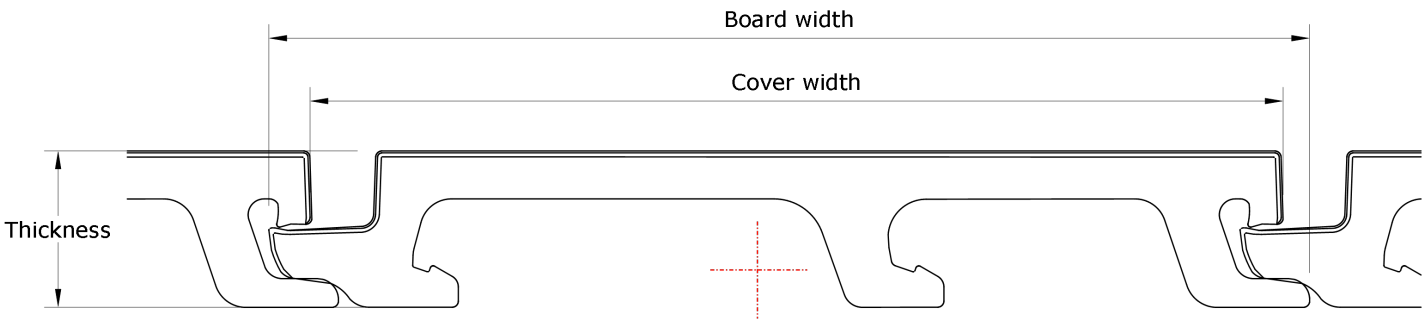

Profile ID	Board width mm (in)	Thickness mm (in)	Mass kg/m (lb/ft)	Cover width mm (in)	Coverage m/m^2 (ft/ft^2)	Cover mass kg/m^2 (lb/ft^2)	VistaClad trim compatibility
STGJ111	159.5 (6.28)	22.5 (0.89)	2.2 (1.48)	152.6 (6.01)	6.6 (2.01)	14.5 (2.97)	Yes

Mechanical properties

Material specific mechanical properties

All information within this table is currently based on internal laboratory results of Infinity.

Properties	Result	Test method	Information
Scratch resistance	20 N (4.5 lbf)	FORD FLTM BO 162-01	A standardised test using weighted sharp nails to scratch the surface of the profiles to determine the surface scratch resistance.
Abrasion resistance	13 mg/c (0.000459 oz/c)	ASTM D4060	To estimate the wear resistance of the Infinity cap, the product was subjected to abrasive wheels carrying 1kg loads at 60 rotations a minute for 1 000 cycles.
Cap delamination	60 N (13.49 lbf)/ 50 mm (1.97") 5.32mm (0.21")	ISO 24345-2006	Allowable peel-off length is 10 mm (0.39").
Shore hardness (D)	71	ISO 868	A standardised test to determine the depth of penetration of a specific indenter. Results greater than 60 fall under the category "Extra hard".
Brinelle Hardness	39.8 N/mm^2 (0.28 lbf/in^2)	EN 15534-1	To determine the resistance to indentation and cracking of the surface cap on the Infinity material the hardness of the material was measured before the impact test was performed.
Impact test – Value of residual indentation	0.08 mm (1 189.2 lbf)	EN 15534-1	
Maximum crack length	No crack	EN 15534-1	

Profile flexural performance testing

Flexural properties of polymer composites can be influenced by the profile geometry and span. Typical properties of the Infinity material technology are captured below based on internal test results as an indication of the expected behaviour of the Infinity material.

Profile	Span mm (in)	Ultimate Load kN (lbf)	Flexural strength MOR MPa (lbf/in^2)	Flexural stiffness MOE MPa (lbf/in^2)	Information
STGJ111	300 (11.81)	1.8 (404.64)	26.3 (3 813.5)	2 028 (294 060)	Internal reports have provided flexural performance of individual profiles at spans achievable with the test equipment used and as close to typical of regional standards in cladding applications as possible. Further testing is underway at typical installation spans to different regions.

Impact of weathering (material factor estimate)

Material properties can vary as a result of long-term weathering. To estimate this impact on the material's flexural properties, the product is subjected to various weathering effects and the performance with and without weathering is compared. The overall end-use adjustment factor is selected based on the weathering effect that has the most impact on the material.

Properties	Flexural strength (%)	Flexural stiffness (%)	Adjustment factor	Test method	Information
High temperature effect	96.8	90.3	0.9	ASTM D7032 – 17, ASTM D2565, and ASTM D790.	To confirm compliance with ICC-ES, AC 174, Infinity materials were evaluated for a decking application to determine what affect temperature, moisture and UV exposure had on the flexural performance of the material in accordance with the test methods listed. The end use adjustment factor is based on the effect with the most impact. The results of which can be located within the issued CCR report, **here**.
Low temperature effect	145.6	137.5	1.0		
Moisture effect	108.3	108.5	1.0		
UV resistance	92.7	94.4	1.0		
Freeze-thaw resistance	104.8	100.7	1.0		
Overall end-Use adjustment factor			0.9		

Flexural tests were conducted to failure at the specified span per ASTM D7032 per the bellow table. The average changes in properties between the control specimen and tested specimens were calculated as a percentage.

Property test	Conditions	Duration
Temperature effect	-29 to 52 °C (±2°C) (-20.2 to 125.6 °F (±3.6 °F))	N/A
Moisture effect	At moisture conditions expected in service.	24 Hour
Ultraviolet resistance	Per ASTM G151, Specimens are exposed to repetitive cycles of light and moisture.	2 000 Hours of exposure in accordance with cycles in accordance with ASTM G151
Freeze-thaw resistance	Profile specimens are Submerged under weights for 24 hours, then frozen at -29°C for 24 hour, then thawed at ambient temperatures for 24 hours.	3 cycles at 72 Hours per cycle.

Sectional properties

The following table provides a sectional property summary of the currently available VistaClad Infinity profiles in their typical board orientation. Please see **Appendix A** for profile drawings and further information.

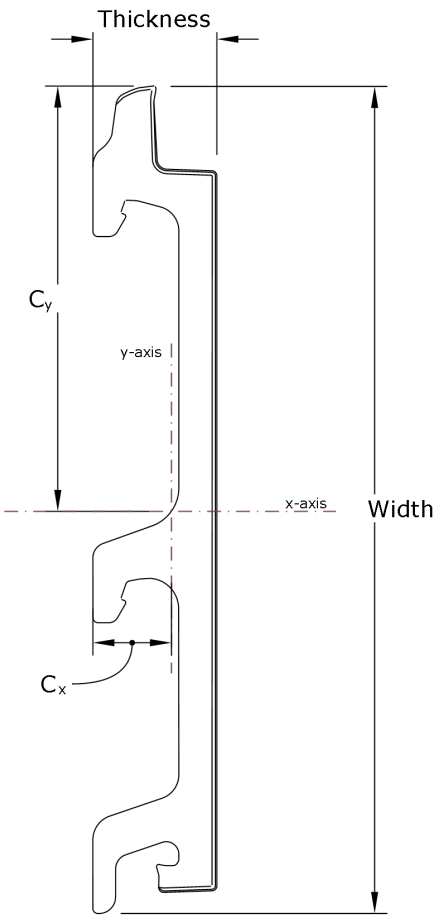

Profile ID	Width mm (in)	Thickness mm (in)	Area mm^2 (in^2)	I_x mm^4 (in^4)	I_y mm^4 (in^4)	C_x mm (in)	C_y mm (in)	S_x mm^3 (in^3)	S_y mm^3 (in^3)
STGJ111	159.5 (6.28)	22.5 (0.89)	1 796 (2.78)	4 206 259 (10.11)	73 798 (0.18)	14.3 (0.56)	83.6 (3.29)	50 321 (3.07)	5 174 (0.32)

Thermal properties

Typical properties of the Infinity material technology are captured below as an indication of the expected behaviour of the Infinity material.

Properties	Results	Test method	Information
Coefficient of thermal expansion (CTE)	45 x 10-6 mm/mm/°C (25 in/in/°F?)	ISO 11359-1 and 2 (A)	Materials were tested at temperatures between of 23.6°C (74.48°F) and 80°C (176°F) resulting in a total temperature change of 56 °C (132.8°F). The full details of this testing can be in the following SGS EU report **here**.

Fire reaction properties

Typical properties of Infinity material technologies are captured below as an indication of their expected behaviour.

Infinity fire reaction properties

Standard	Properties	Result		Requirement	Test Method	Information
ICC-ES AC 174	Flame spread index (FSI)	110	N/A	Less than 200	ASTM E84	To confirm fire reaction compliance with ICC-ES, AC 174, Infinity deck boards were set alight in accordance with the test methods listed. The results of which can be located within the issued CCR report, **here**.
	Smoke development index (SDI)	500		Less than 450		

Weathering

Most materials are susceptible to weathering. The environment, and factors such as Ultraviolet (UV) light exposure, oxidation and contact with organisms (termites, mold, etc.), to which the materials are exposed will influence the rate of deterioration. The impact of weathering on the flexural performance (material factor estimate) of the products is captured in the Mechanical properties section above.

Colour fade

Weathering over time can result in a colour change of the material. **ΔE** is a common form of measurement for colour fade. The **ΔE** denotes the colour difference between an original sample and a tested sample after different levels of exposure to UV light (and potentially other weathering effects). **ΔE** is measured on a scale of 1 to 100 and attempts to provide a simple metric of how the human eye perceives colour change. Both 'light' and 'dark' colours are tested to provide an indication of the range of performance of the product.

Standard	Colour Reference	ΔE	Grey scale	Test method	Information	
ICC-ES AC 174	Baltic Nero (CO2)	2.46	3 to 4	ASTM G155-13 4 000 Hours	Change perceptible at a glance	As part of ICC-ES AC 174 requirements. The results of the issued CCRR can be found **here**.
	Caribbean coral	2.48	3 to 4		Changes perceptible at a glance	

Biodegradation

Materials exposed to organisms such as termites or mould can degrade as a result.

Fungal and Termite resistance

As a certain percentage of cellulose-polymer composition contains cellulose fibres which may provide nutrition to fungi and mold, promote growth, samples were exposed to spores and their growth rates monitored.

Standard	Fungal strand	Measured value	Test method	Information
ICC-ES AC 174 (Fungal resistance)	G.trabeum (change in mass)	0.77%	ASTM D 2017	To confirm compliance with ICC-ES, AC 174, bio resistance requirements. The results of which can be located within the issued CCR report, **here**.
	P.Placenta (change in mass)	0.91%		
	T.Versicolor (change in mass)	0.90%		
	I.Lacteus (change in mass)	0.91%		
ICC-ES AC 174 (Termite resistance)	G.trabeum (change in mass)	0.77%		

Infinity materials were submitted for testing to confirm the effectiveness of fungistatic compounds within the composition's formulation, then visually assessed in accordance with the following scale.

0. No growth, the material is resistant to fungal attack.
1. Initial growth, the material is partially protected against fungal attack or generally not susceptible to such attach.
2. Obvious growth and sporulation, the material is susceptible to fungal attack.

Standard	Fungal strand	Measured value	Test method	Information
Eurocode	A.Niger , ATCC 6275	0	ISO 16869	To confirm compliance with ISO 16869 for fungal, Infinity samples were exposed to spores for a period of 21 days and their growth rates monitored. The report can be found **here**.
	C. Globosum , ATCC 6205	0		
	P.Variotii, CICC 40379	0		
	P.Funiculosum, CICC 40279	0		
	T.Longibrachiatum CICC 13053	0		

System components

The following section provides a brief overview of the system components and ancillary items with which the Infinity cladding profiles interact. Please see **Appendix B** for drawings.

Cladding clip strips

Material specific properties

Typical mechanical properties for ISO 230 (AMSA) from online sources.

Properties	Results	Notes
Typical yield strength	230 MPa (33 350 lbf/in^2)	Typical for ISO 230 (SANS 4998 Gr220, ASTM A653 Gr230 CS type A, EN 10346 DX 51D, JIS G3302 SGCC).
Ultimate tensile strength	270 to 500 MPa (39 150 to 72 500 lbf/in^2)	
Modulus of Elasticity	200 GPa (2.901 x 107 lbf/in^2)	
Bulk Modulus	160 GPa (2.32 x 107 lbf/in^2)	
Poisson Ratio	0.29	
Shear modulus	80 (GPa) (1.16 x 107 lbf/in^2)	

Profile specific strength properties

The individual 'supports' of the clip strip that hold the boards in once installed were tested to provide an indication of a yielding point under a negative load. These springs were loaded (Fload in schematics below) individually with a custom-made jig that would result in the maximum moment being generated (attempting to replicate a worst-case scenario). The strips were supported with fasteners (Fscrew in schematics below) into a secure substructure using the holes provided in the strips: two through the front face of the flat strip either side of the point of application of the tensile load and four through the bottom flanges of the top hat.

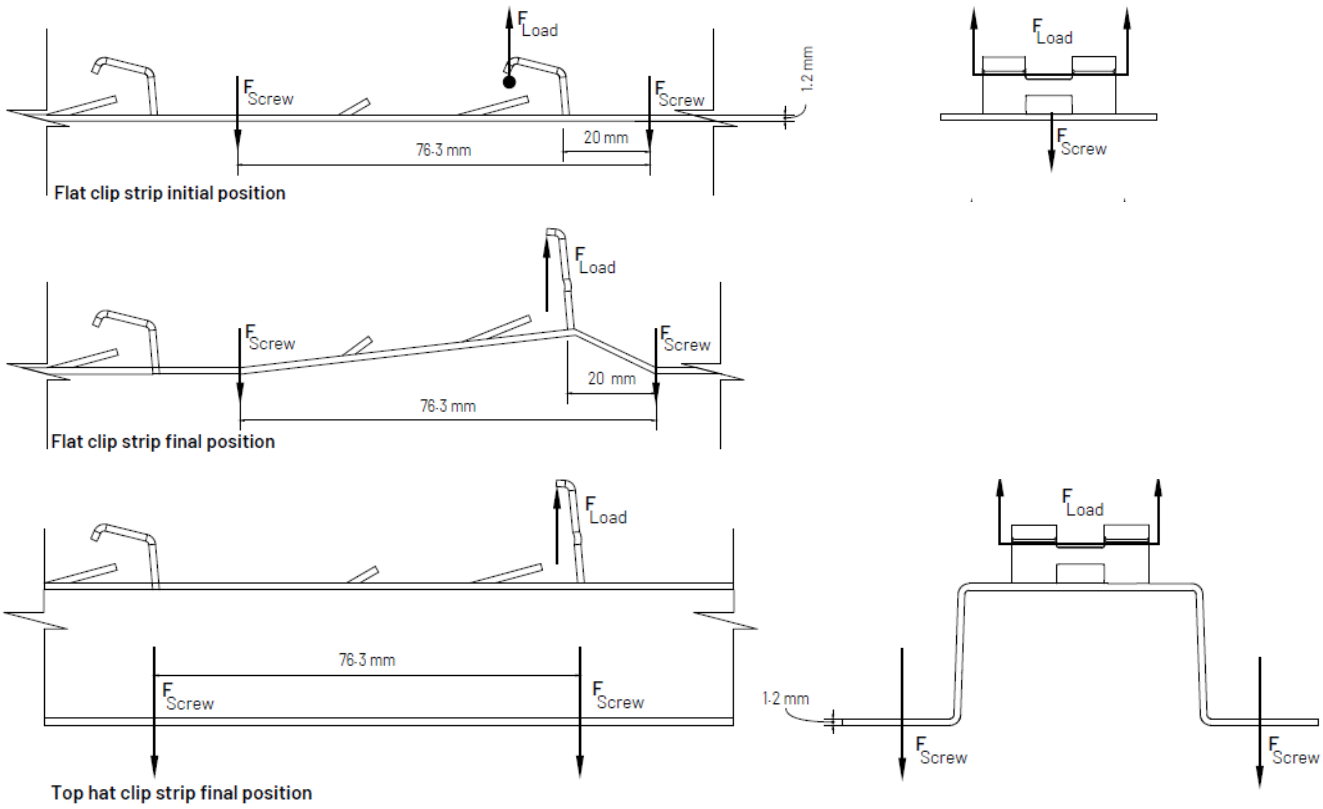

The yield load captured below is an indication of the load at which a single clip deforms to an extent that would allow the respective part of the board profile to escape the clip. This load provides an indication of the maximum load that a single clip strip interaction can support. It is suggested that this would be conservative when considering the interaction of multiple clip strips and boards together. In this scenario, it is expected that a larger load would be required to create enough deformation that would facilitate the release of a board or part thereof. These assessments assume adequate interaction between the board and clip strip, and appropriate fixing of the clip strip to the substructure/substrate. Note that the tests conducted on the flat strips resulted in localized separation (see final flat clip strip schematic above) of the clip strip from the support structure during loading (a potential explanation of the differences in results below). This highlights the need for appropriate fixing frequency between this part and the substructure/substrate (in addition to fastener withdrawal limitations).

Item	Min. yield load N (lbf)	Average yield load N (lbf)	Test method	Information
Flat strip	431 (96.9)	595 (133.77)	N/A	Simple tensile tests were conducted by an independent third-party laboratory. Five samples of the flat strip and five samples of top hat strip were tested. The performance of the top hat strip is assumed to be indicative of that of the channel strip.
Channel	374 (84.08)	429 (96.45)		
Top hat	374 (84.08)	429 (96.45)		

Weathering (Corrosion information)

Part	Specification	Thickness	Notes
Steel substrate	ISQ 230	1.2 mm (0.05")	All clip strip types are 1.2 mm (0.05") thick.
Galvanisation	Z275	19 µm	Supplier information.
Powder coating	Ferro VEDOC VP Polyester (matt black)	60 to 80 µm	Supplier information.

Profile properties

Item	Description	Material	Width mm (in)	Gauge mm (in)	Depth mm (in)	Ventilation gap mm (in)	Length mm (in)	Mass kg (lb)
Flat strip		Galvanised steel ISQ 230 (Z275) Powder coated	40 (1.58)	1.2 (0.05)	12 (0.47)	1.2 (0.05)	1 831 (72.09)	0.7 (1.55)
Channel			45 (1.77)	1.2 (0.05)	34 (1.34)	> 23.5 (0.93)	2 745 (108.07)	2.2 (4.86)
Top hat	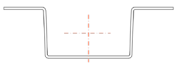		86 (3.39)	1.2 (0.05)	36 (1.42)	> 25.4 (1)	2 745 (108.07)	3.2 (7.06)

Sectional properties

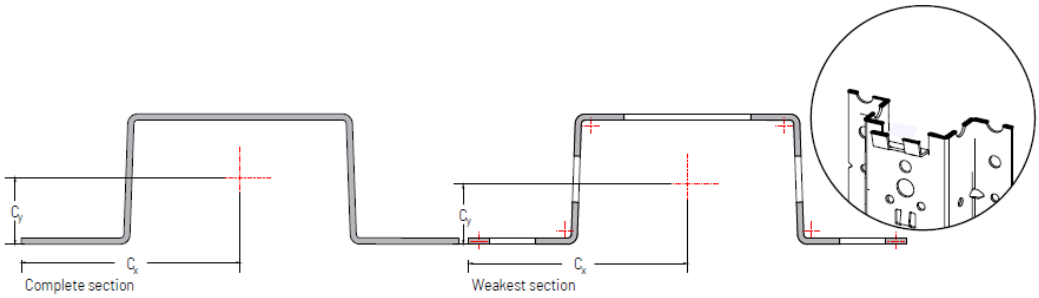

Sectional properties for the full cross-section of each profile as well as the portion of the profile with the most cavities present are provided.

Item	Width mm (in)	Thickness mm (in)	Area mm^2 (in^2)	I_x mm^4 (in^4)	I_y mm^4 (in^4)	C_x mm (in)	C_y mm (in)	S_x mm^3 (in^3)	S_y mm^3 (in^3)
Flat strip	40 (1.58)	1.2 (0.05) G18	48 (1.89)	6 (0.01)	6400 (0.02)	20 (0.79)	0.6 (0.03)	10 (0.01)	320 (0.02)
Flat strip adjustment			18 (0.71)	2.2 (0.01)	4889 (0.02)	20 (0.79)	0.6 (0.03)	3.7 (0.01)	244 (0.02)
Channel	45 (1.78)	1.2 (0.05) G18	105 (4.14)	5820 (0.02)	33006 (0.08)	22.7 (0.9)	16.9 (0.67)	345 (0.03)	1455 (0.09)
Channel adjustment			54 (2.13)	3775 (0.01)	21334 (0.06)	22.7 (0.9)	16 (0.63)	235 (0.02)	950 (0.06)
Top hat	86 (3.39)	1.2 (0.05) G18	156 (6.15)	17166 (0.05)	87585 (0.22)	42.7 (1.69)	12.8 (0.51)	1338 (0.09)	2050 (0.13)
Top hat adjustment			83 (3.27)	9446 (0.03)	50452 (0.13)	42.7 (1.69)	11.8 (0.47)	802 (0.05)	1180 (0.08)

Fasteners

The following table provides a quick reference list of typical fasteners that may be used for various substrates. This information has been collected from several manufacturers for convenience and is presented herein to provide indicative performance. Please refer to applicable manufacturers for further information and/or confirmation of the suitability of the application. Appropriate fasteners must be utilised. Particular attention should be paid to substructure/substrate and environmental conditions (particularly with respect to corrosion) of the site. All applications should adhere to applicable standards. All timber and metal profiles should be treated and/or coated appropriately. Regular proactive maintenance is advised where possible.

Application	Fastener type	Material	Size (mm)	Tensile kN (lbf)	Ultimate Shear kN (lbf)	Withdrawal resistance kN (lbf)	Edge distance	Minimum spacing	Minimum substructure material specification
Timber	Wafer head	C1022 case hardened	M5.5 x 45	13.9 (3 124.72)	8.4 (1 888.32)	3.9 (876.72)	Ø x 5 = 28 mm (1.10")	Ø x 5 = 28 mm (1.10")	Pine - F7 rated at 36 mm (1.42") embedment
	Tek screw		M5.5 x 50						
Steel	Wafer head	C1022 case hardened	M5.5 x 22	15.3 (3 439.44)	8.8 (1 978.24)	2.2 (494.56)	Ø x 2 = 12 mm (0.47")	Ø x 2 = 12 mm (0.47")	Steel - 1.2 mm (0.05") thick
						4.0 (899.20)			Steel - 1.5 (0.06") mm thick
	Tek screw		M5.5 x 25			5.4 (1 213.92)			Steel - 1.9 (0.08") mm thick
						7.4 (1 663.52)			Steel - 2.4 (0.10") mm thick
Masonry	Hilti HPS-1 6 PE sleeved anchor*	Carbon steel, galvanised	M 6.0 x 40	0.25 (56.20)	0.35 (78.68)	Not available	30 mm (1.18")	30 mm (1.18")	Devoid of cracks and similar. Typical embedment depth of 30 to 40 mm (1.18" to 1.58") Confirm adequate strength. Refer to Hilti TDS.
	Hilti HUS3-P Concrete screw*	Carbon steel, galvanised	M5.0 x 40	2.8 (629.44)	3.9 (876.72)	Not available	35 mm (1.38")	35 mm (1.38")	Devoid of cracks and similar. Typical embedment depth of 40 mm (1.58"). Confirm adequate strength. Refer to Hilti TDS.

*Refer to actual suppliers TDS for specific information.

Typical fastener specifications and coating

Screw corrosion classification

The following table provides a summary of materials and coatings typical fasteners used by Eva-last.

	Material Details			
Fastener category	**Size**	**Material**	**Coating Type**	**Coating Thickness**
Carbon clip screws	M4.2	C1022	Magni 599 (full coat)	20 µm
Carbon deck screws	M5.0			
Carbon frame screws	M6.0			
Carbon trim screws	M5.5	10B21		20 µm
Tek screw	M5.5 M5.5 M5.5	C1022	Class 3 Class 4 Zinc Plated	25 µm 50 µm 8 µm
Stainless clip screw	M4.2	SS316	Magni 599 (full coat)	20 µm
Stainless deck screw	M5.0		Enamel head coating	N/a
Stainless trim screw	M5.5			

Nylon adaptors

Profile properties

The following list of adaptors is designed for use with the cladding clip strip and trim listed below. See the IG for further details.

Item	Description	Material	Associated trim	Width (mm)	Height (mm)	Length (mm)	Mass (g)
Top and bottom adaptor		Glass fibre reinforced nylon composite	Universal trim	50 (1.97)	70 (2.76)	23 (0.91)	9 (0.02)
Side adaptor		Glass fibre reinforced nylon composite		50 (1.97)	95 (3.74)	23 (0.91)	15 (0.04)
Internal corner adaptor	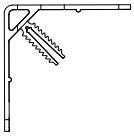	Glass fibre reinforced nylon composite	Internal corner trim profile	54 (2.13)	54 (2.13)	40 (1.58)	10 (0.03)
External corner adaptor	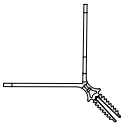	Glass fibre reinforced nylon composite	External corner trim profile	71 (2.80)	71 (2.80)	40 (1.58)	8 (0.02)

Aluminum trim

Profile properties

The following list of trim profiles is designed to be compatible with the respective adaptors listed above. See the IG for further details.

Item	Description	Material	Associated adaptor	Width mm (in)	Height mm (in)	Mass kg/m (lb/ft)
Universal trim profile	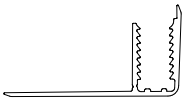	Aluminium 6063-T5, powder coated	Top and bottom adaptor and Side adaptor	25 (0.99)	50 (1.97)	0.37 (0.25)
T trim profile	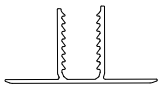	Aluminium 6063-T5, powder coated	Side adaptor	25 (0.99)	40 (1.58)	0.26 (0.18)
U trim profile		Aluminium 6063-T5, powder coated	Side adaptor and Top and bottom adaptor	13 (0.51)	21 (0.83)	0.17 (0.12)
Internal corner trim profile	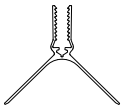	Aluminium 6063-T5, powder coated	Internal corner adaptor	51 (2.01)	59 (2.32)	0.50 (0.34)
External corner trim profile	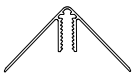	Aluminium 6063-T5, powder coated	External corner adaptor	51 (2.01)	51 (2.01)	0.51 (0.34)

Weathering (Corrosion information)

Part	Specification	Thickness	Notes
Aluminium substrate	6063-T5	0.9 mm (0.04")	Thinnest part of various trim parts.
Powder coating	Polyester (multiple colour options)	60 to 80 µm	Supplier information.

Board sealant volume requirements

A summary of suggested sealant volumes per application is provided below for convenience. The volume of sealant per board face is in reference to a suggested bead to be placed on the underside of the trim before inserting the trim into the adaptors. The volume of sealant at the groove refers to the cavity created beneath the trim at the tongue and groove joint between two consecutive boards and/or at the groove(s) within the board profile. Refer to the IG for further information.

Profile	Quantity of grooves	Volume of sealant to seal the board face (ml)	Volume of sealant to fill grooves (ml)	Total Volume of sealant per board (ml)	Total volume of sealant per meter of trim (ml/m)	Information
STGJ111	1	1.3	1.2	4.0	26.2	The volume required between trim and boards are based off a 5 mm diameter bead assumption. See **Appendix A** for groove sizes. All volumes are estimations and do not include shrinkage.

Potential liquid sealants to consider (application dependent):

Soudal Silirub Colour
Loctite PL Heavy Duty Sealant
Loctite 100% Silicone
Loctite PL Roof and Flashing Sealant
Alcolin Alco Flex Neutral Silicone

System properties

The VistaClad system consists of the board profiles, clip strips and trim system installed on some form of substructure. The results captured below are based off internal tests and/or finite element analyses (FEA). The internal tests are conducted using a pressurised 3.0 m (9.84 ft) by 3.6 m (11.81 ft) test chamber. The chamber allows for varying positive pressures to be applied and for water to be sprayed at differing rates. These results are believed to be indicative and are presented to provide a gauge of performance of an installed system until independent test data is available.

System strength evaluation

An installed system of the STGJ111 profile with supports (substructure and clip strips) at 600 mm (23.62") spans was tested under positive pressures in excess of 3 kPa (0.44 psi), the results of which showed no significant yielding of any of the system elements. Internal FEAs supported this result. The internal test rig is not yet capable of generating meaningful negative test pressures, as a result internal FEAs were used to supplement this scenario. Simulations at negative pressures of 1 kPa (0.15 psi) indicated no significant yielding of any of the system elements. Typical simulation assumptions were made between interactions of components, fixtures to substrate, material homogeneity, and load application.

Water ingress evaluation

The water ingress assessment followed the E2-VM1 Verification Method as per New Zealand Building Regulations and Australian National Construction Code. The Apex STTHM204X and approximately 5% STTHM203X profiles underwent evaluation in an E2-VM1 test, installed at 600 mm (23.62") spans, meeting identical requirements. Internal simulations strictly adhered to E2-VM1 test methods, ensuring no splashing or leakage beyond the ingress plane under 50 Pa (0.007 psi) pressure for specified durations, with most assemblies surpassing 100 Pa (0.01 psi) and failed at approximately 150 Pa (0.02 psi).

The assessment process involved component-level evaluations. Refer to the table and infographic below for an assembly overview. Additional flashing parts are detailed in appendix A. The primary sealant used was Alcolin Alco Flex Neutral Silicone, complemented by standard flashing tape. For comprehensive assembly details, consult the Installation Guide (IG).

Note: STTHM203X and 204X share the same tongue and groove as STTHM202X, which was strength-tested as the weakest profiles and assumed to perform similarly. STGJ111, with a different material and tongue and groove design, maintains the same system design and passed a flat wall test for water leakage, also assumed to perform like Apex.

Assembly

1. Profiles STTHM203X and STTHM204X
2. Electric box penetration
3. Pipe penetration
4. Horizontal joint for second story
5. Butt joints
6. Window
7. Flat roof finish
8. Perpendicular roof finish
9. External corner
10. Internal corner
11. Parapet assembly
12. Edge assembly (Flat and wall)

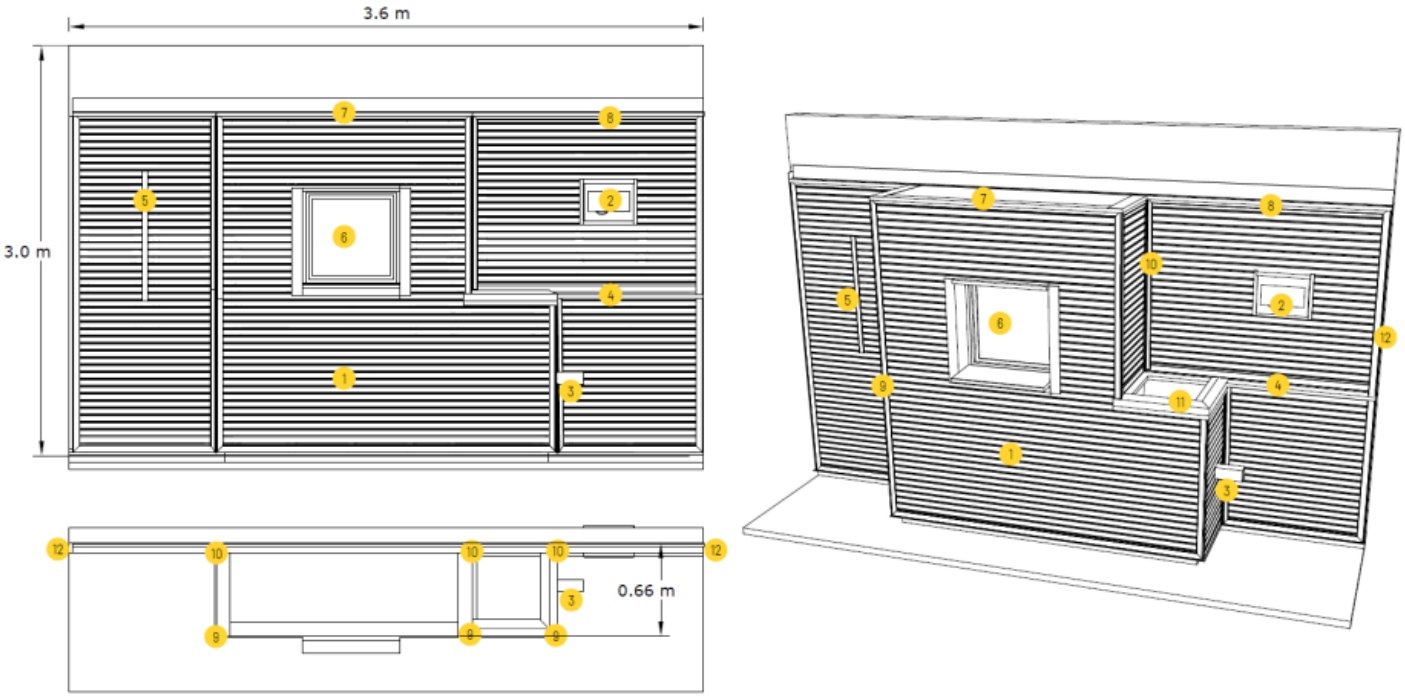

Disclaimer and copyright

Document disclaimer

The provided information is offered in good faith as accurate but without guarantee. Eva-Last makes no warranties or representations of any kind (express or implied) about the accuracy, adequacy, currency, or completeness of the information, or that it is necessarily suitable for the intended use.

Compliance with this document does not guarantee immunity from breach of any statutory requirements, building codes or relevant standards. The final responsibility for the correct design and specification rests with the designer and, for its satisfactory execution, with the contractor. Appropriate warnings and safe handling procedures should be provided to handlers and users.

While most data have been compiled from research, case histories, experience and testing, small changes in the environment can produce marked differences in performance. The decision to use a material, and in what manner, is made at your own risk. The use of a material and method may therefore need to be modified to its intended end use and environment.

Eva-Last, its directors, officers or employees shall not be responsible for any direct, indirect, or special loss or damage arising from, or as a consequence of, use of, or reliance upon, any information contained in this document or other documents referenced herein. Eva-Last expressly disclaims any liability which is based on or arises out of the information or any errors, omissions or misstatements herein.

Drawing disclaimer

All dimensions and specifications are offered in good faith as accurate but without guarantee. The information captured herein may not contain complete details. Eva-Last makes no warranties or representations of any kind (express or implied) about the accuracy, adequacy, currency, or completeness of the information, or that it is necessarily suitable for the intended use.

Compliance with this document does not guarantee immunity from breach of any statutory requirements, building codes or relevant standards. The final responsibility for the correct design and specification rests with the designer and, for its satisfactory execution, with the contractor.

Utilisation disclaimer

Legislation may differ between jurisdictions. Before installing any Eva-Last product, ensure that the application is rational and complies with the local regulations and building codes. Wherever necessary, consult a suitably qualified professional. Be sure to comply with material manufacturer specifications. Where manufacturers and building codes differ, revert to the building code requirements. Check that your choice of product is suitable for its intended application. For further product specification and information visit www.eva-last.com.

Copyright

If reprinted or reproduced or utilised in any form Eva-Last should be acknowledged as the source of the information.

Eva-Last periodically updates the information contained in this document as well as that of the Eva Last documents that have been referenced herein. Before using this document, please refer to the Eva-Last website (www.eva-last.com) for the most up-to-date documents.

Contact information

Eva-Last
Email: info@eva-last.com
Website: www.eva-last.com

Appendix A

Profiles details

Profile properties	
Product code	STGJ111
Sectional area (mm^2)	1795.8
Approximate mass (kg/m)	2.2

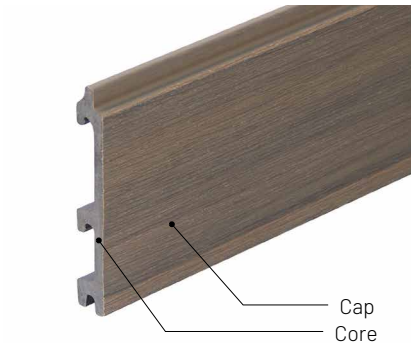

Sectional properties	
I_x (mm^4)	4 206 259
I_y (mm^4)	73 799
C_x (mm)	14.3
C_y (mm)	84.4
S_x (mm^3)	50 320.9
S_y (mm^3)	5 175

Drawing title

Profile properties - STGJ111

File name

VERSION F - TDS - VistaClad Parts

File details

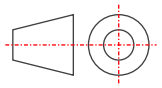

Drawing number	01
Date	December 14, 2023
Page	5 of 8
Scale	NTS

Unless otherwise specified all dimensions are in millimeters.

Issued for information. See supporting documentation for disclaimers and details.

VistaClad™
Cladding inspired by nature

A PRODUCT BY EVA-LAST® INSPIRED BY NATURE. DESIGNED FOR LIFE.

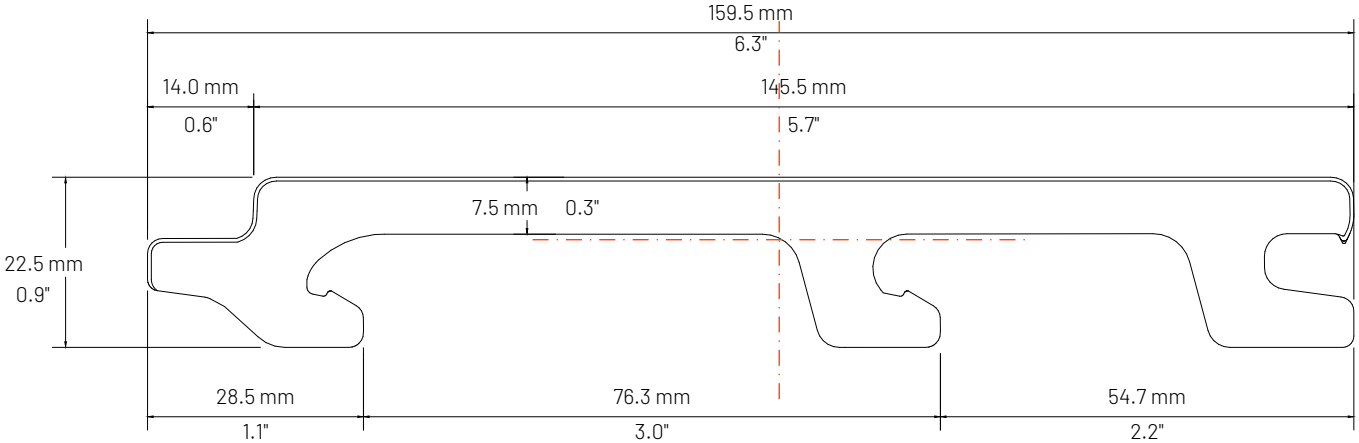

STGJ111 - Profile

Scale 1:1

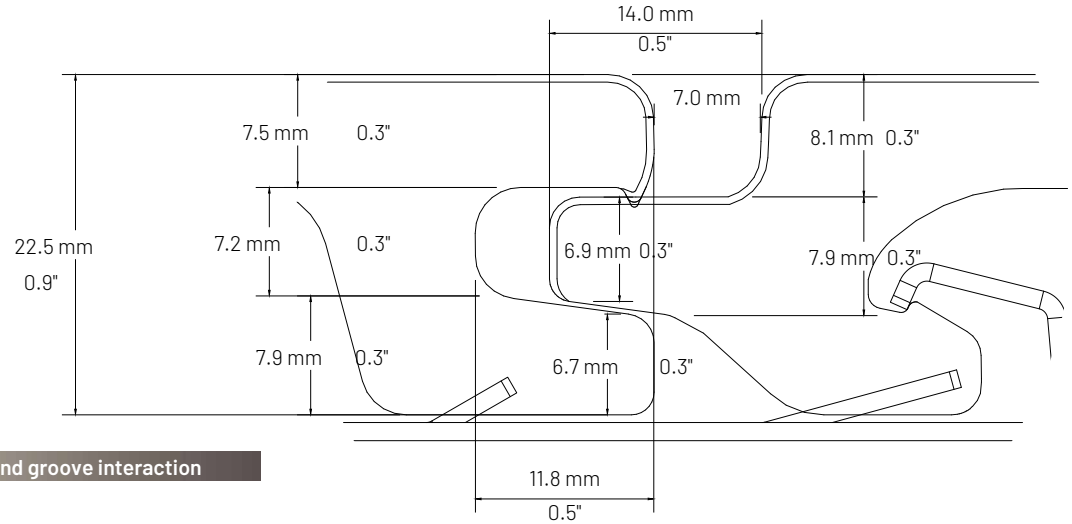

STGJ111 - Tongue and groove interaction

Scale 2:1

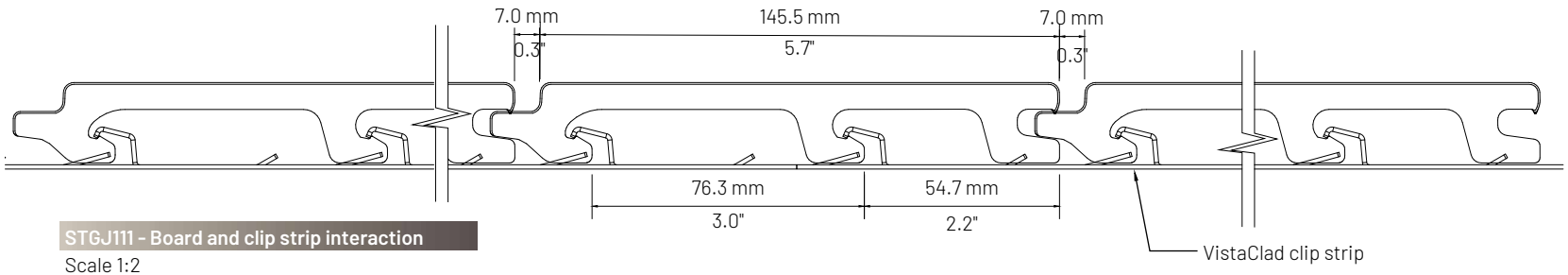

STGJ111 - Board and clip strip interaction

Scale 1:2

Appendix B

System component

Profile properties	
Product code	Flat strip
Sectional area (mm^2)	48
Approximate mass (kg/m)	±0.4

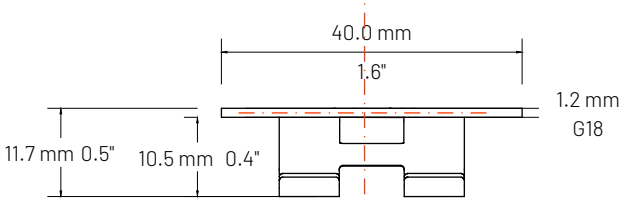

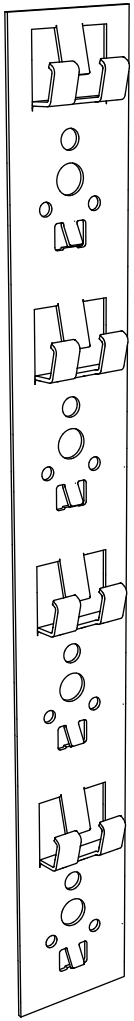

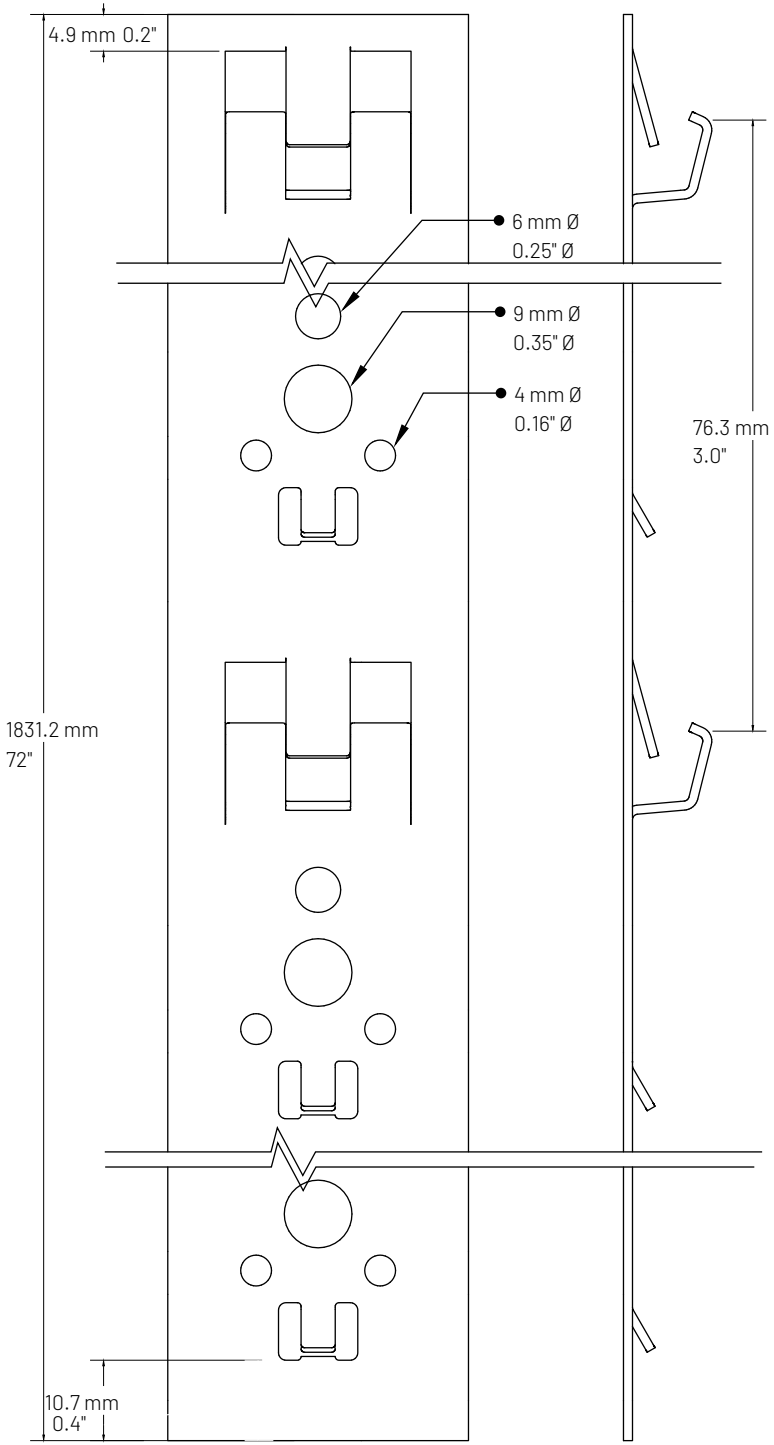

Sectional properties	
I_x(mm^4)	6
I_y(mm^4)	6 400
C_x(mm)	0.6
C_y(mm)	20
S_x(mm^3)	10
S_y(mm^3)	320

Drawing title

Cladding clip strip - Flat strip

File name

VERSION F - TDS - VistaClad Parts

File details

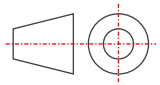

Drawing number	01
Date	December 14, 2023
Page	6 of 8
Scale	NTS

Unless otherwise specified all dimensions are in millimeters.

Issued for information. See supporting documentation for disclaimers and details.

VistaClad
Cladding inspired by nature

A PRODUCT BY EVA-LAST
INSPIRED BY NATURE, DESIGNED FOR LIFE

Profile properties	
Product code	Channel
Sectional area (mm^2)	105
Approximate mass (kg/m)	±0.8

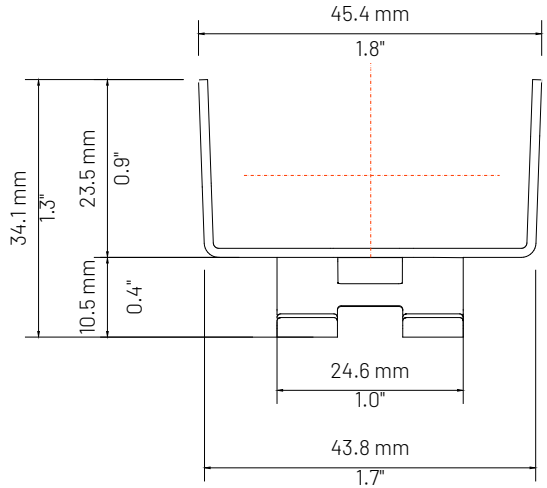

Sectional properties	
I_x(mm^4)	5 820
I_y(mm^4)	33 006
C_x(mm)	22.7
C_y(mm)	16.9
S_x(mm^3)	345
S_y(mm^3)	1 455

Drawing title

Cladding clip strip - Channel

File name

VERSION F - TDS - VistaClad Parts

File details

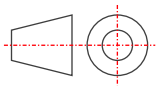

Drawing number	01
Date	December 14, 2023
Page	7 of 8
Scale	NTS

Unless otherwise specified all dimensions are in millimeters.

Issued for information. See supporting documentation for disclaimers and details.

VistaClad
Cladding inspired by nature

A PRODUCT BY EVA-LAST
INSPIRED BY NATURE, DESIGNED FOR LIFE.

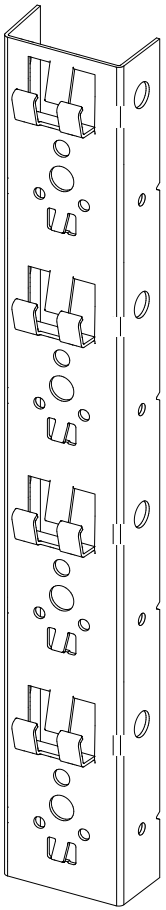

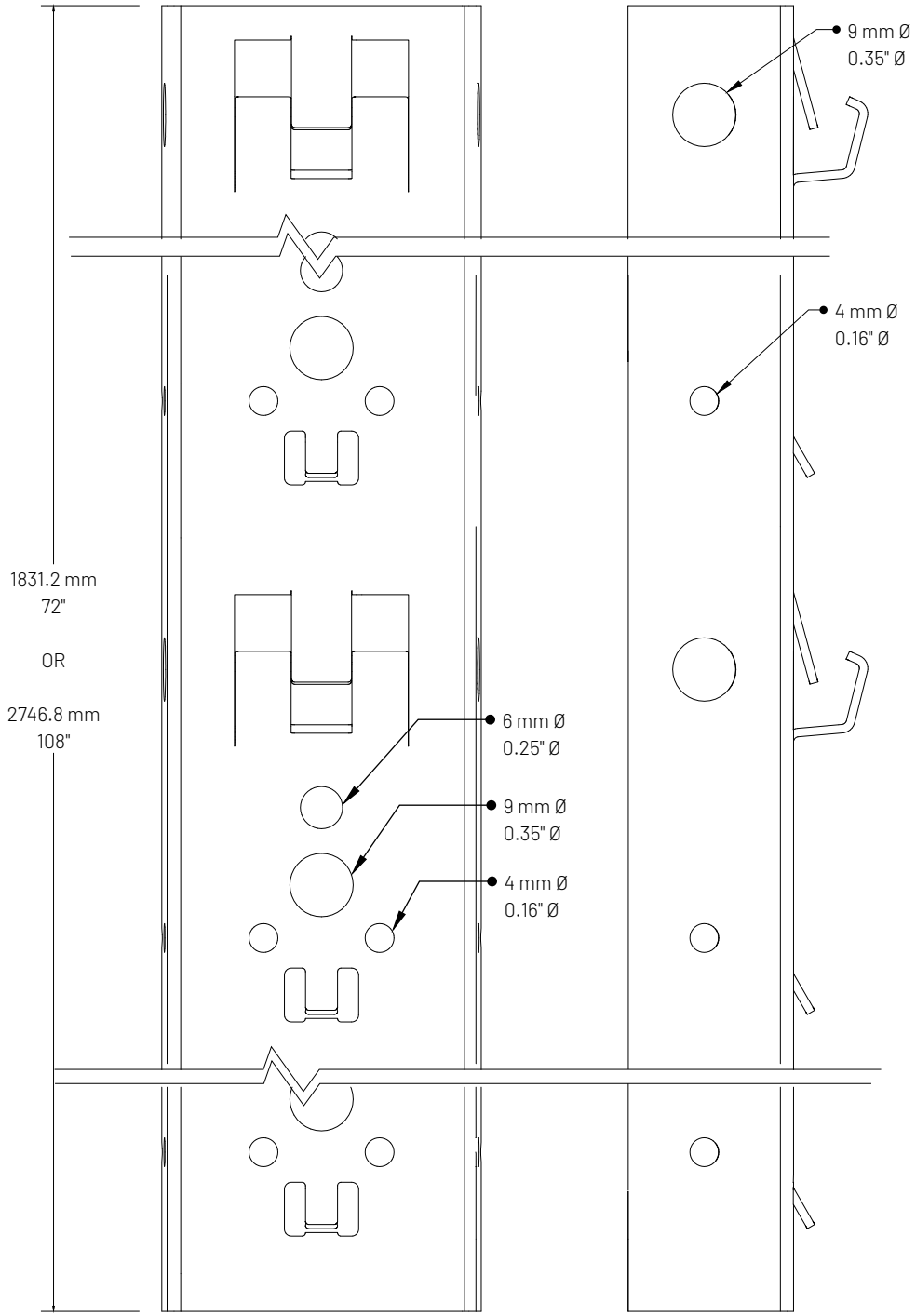

Profile properties	
Product code	Top hat
Sectional area (mm^2)	156
Approximate mass (kg/m)	±1.2

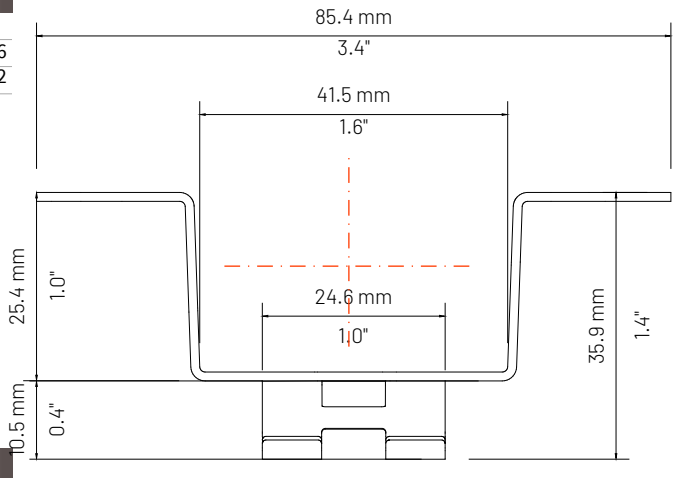

Sectional properties	
I_x(mm^4)	17 166
I_y(mm^4)	87 585
C_x(mm)	42.7
C_y(mm)	12.8
S_x(mm^3)	1 338
S_y(mm^3)	2 050

Drawing title

Cladding clip strip - Top hat

File name

VERSION F - TDS - VistaClad Parts

File details

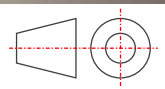

Drawing number	01
Date	December 14, 2023
Page	8 of 8
Scale	NTS

Unless otherwise specified all dimensions are in millimeters.

Issued for information. See supporting documentation for disclaimers and details.

VistaClad
Cladding inspired by nature

A PRODUCT BY EVA-LAST
INSPIRED BY NATURE, DESIGNED FOR LIFE.

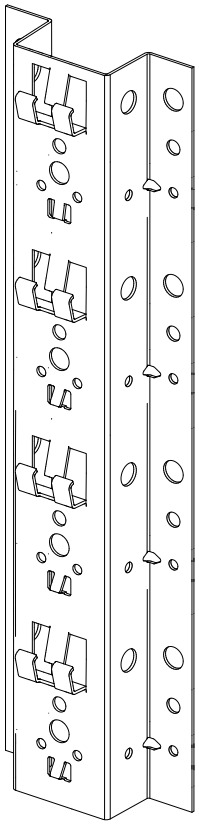

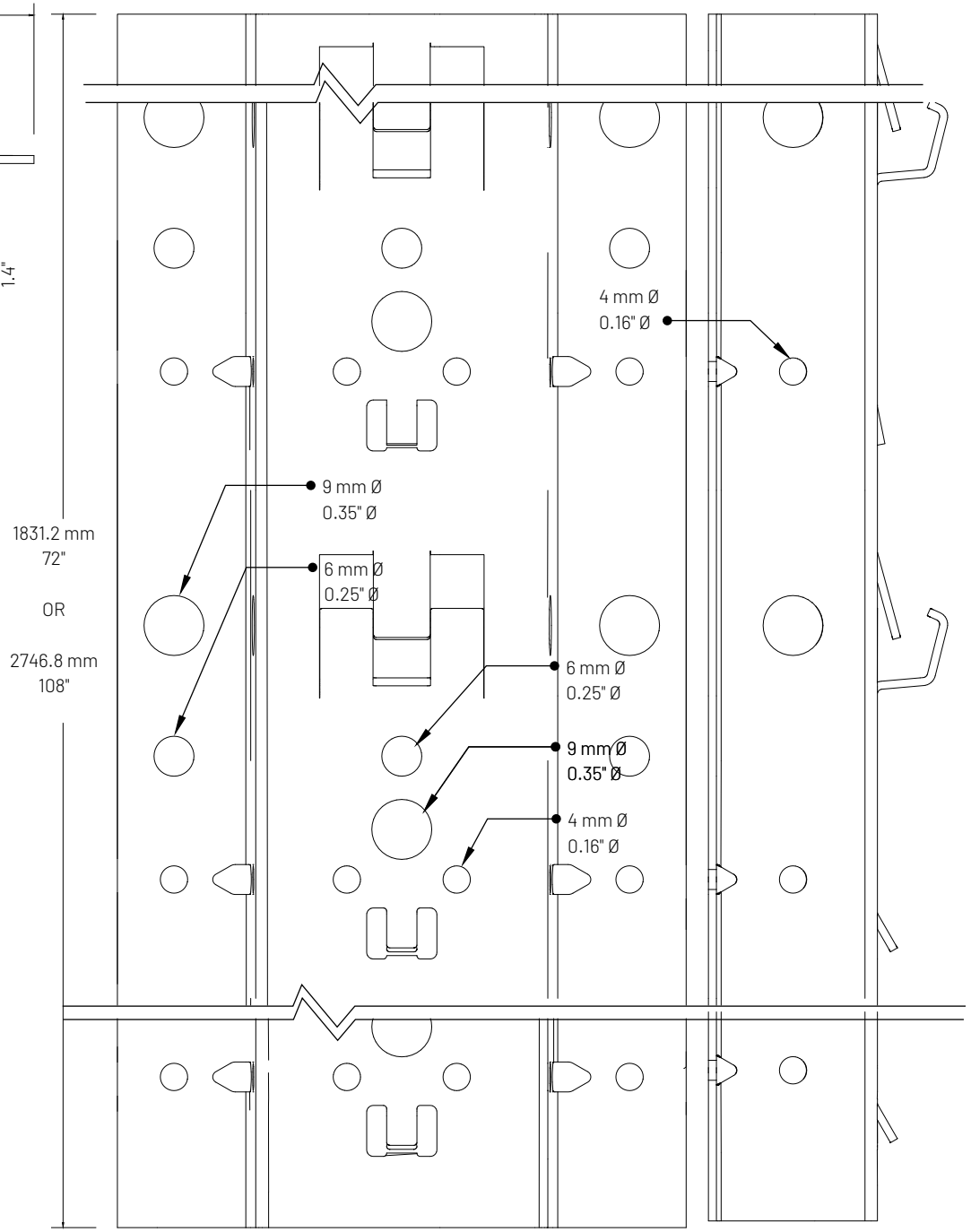

Profile properties
Product code
Sectional area (mm^2)
Approximate mass (kg/m)

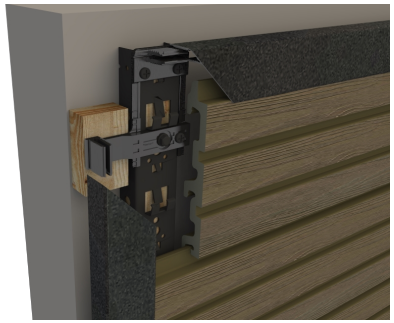

Sectional properties
I_x (mm^4)
I_y (mm^4)
C_x (mm)
C_y (mm)
S_x (mm^3)
S_y (mm^3)

Drawing title

Cladding trim - Universal trim - top and bottom application

File name

VERSION F - TDS - VistaClad Parts

File details

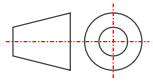

Drawing number	01
Date	December 14, 2023
Page	9 of 8
Scale	NTS

Unless otherwise specified all dimensions are in millimeters.

Issued for information. See supporting documentation for disclaimers and details.

VistaClad
Cladding inspired by nature

A PRODUCT BY EVA-LAST
INSPIRED BY NATURE, DESIGNED FOR LIFE.

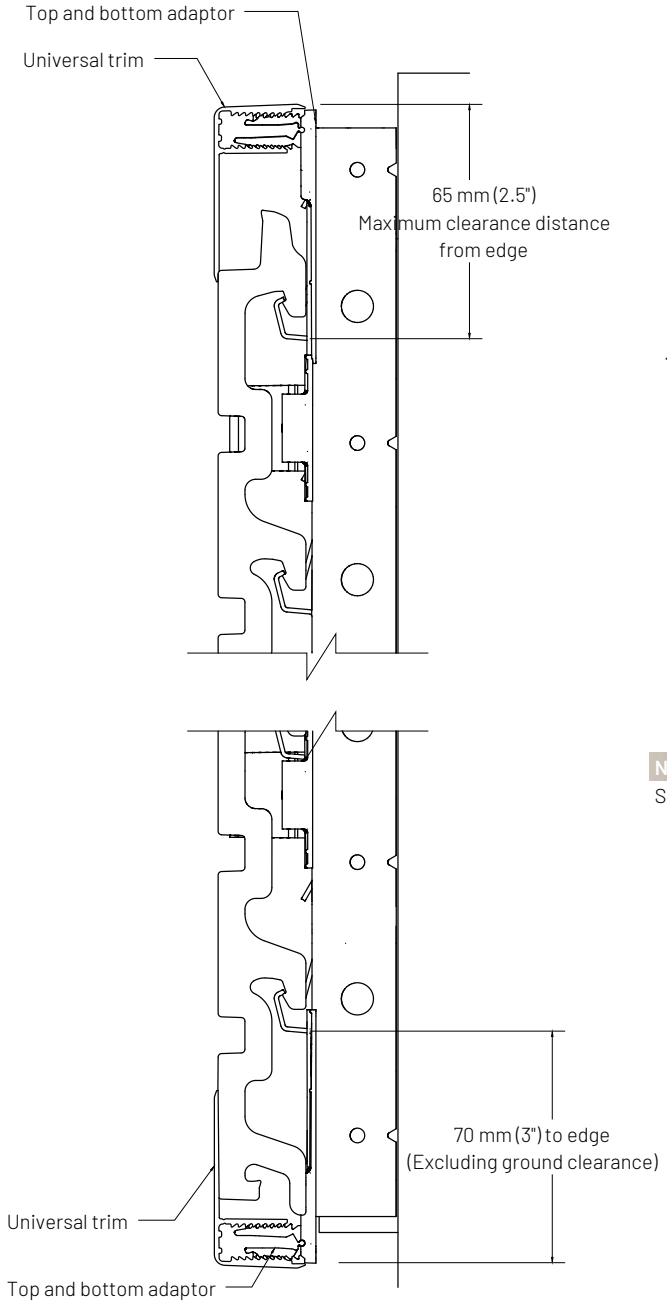

Top and bottom assemblies

Scale 1:1

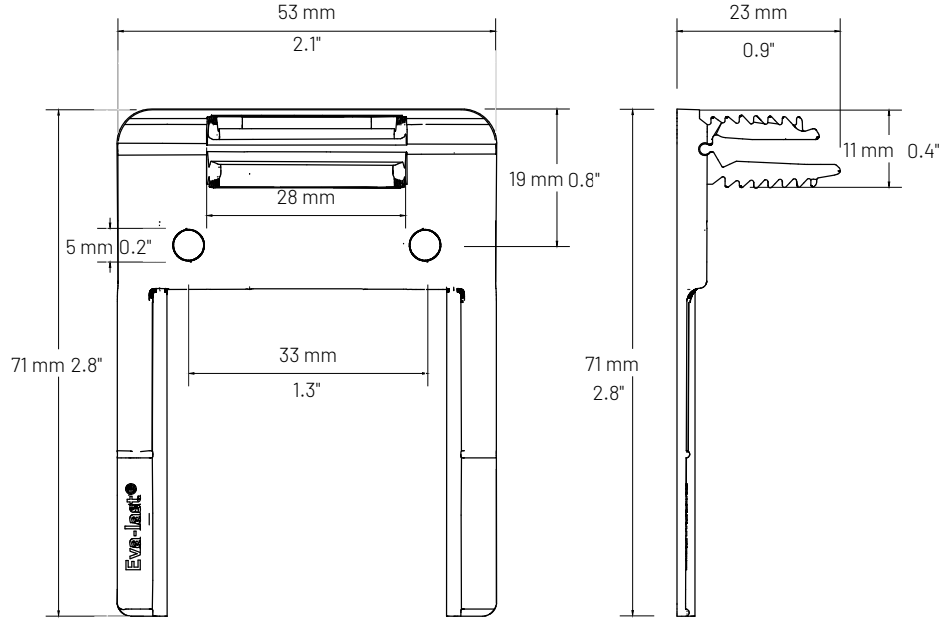

Nylon Top and bottom adaptor

Scale 1:1

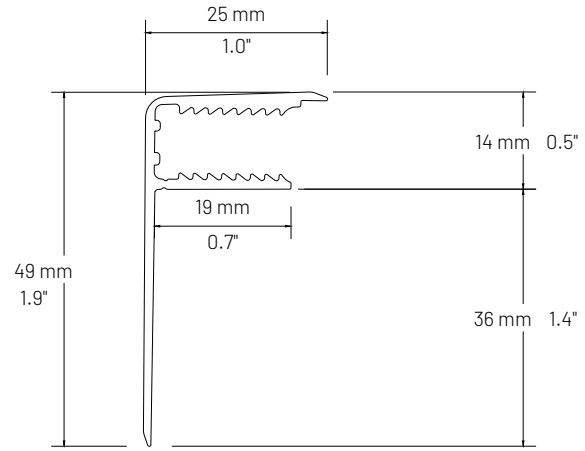

Aluminium universal trim profile

Scale 1:1

Profile properties
Product code
Sectional area (mm^2)
Approximate mass (kg/m)

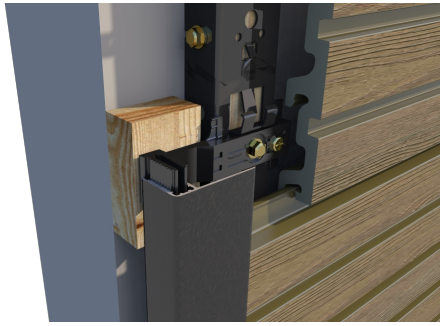

Sectional properties
I_x(mm^4)
I_y(mm^4)
C_x(mm)
C_y(mm)
S_x(mm^3)
S_y(mm^3)

Drawing title
Cladding trim - Universal trim. edge application

File name
VERSION F - TDS - VistaClad Parts

File details

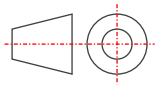

Drawing number	01
Date	December 14, 2023
Page	10 of 8
Scale	NTS

Unless otherwise specified all dimensions are in millimeters.

Issued for information. See supporting documentation for disclaimers and details.

VistaClad
Cladding inspired by nature

A PRODUCT BY EVA-LAST
INSPIRED BY NATURE. DESIGNED FOR LIFE.

Side adaptor

17/03/2025

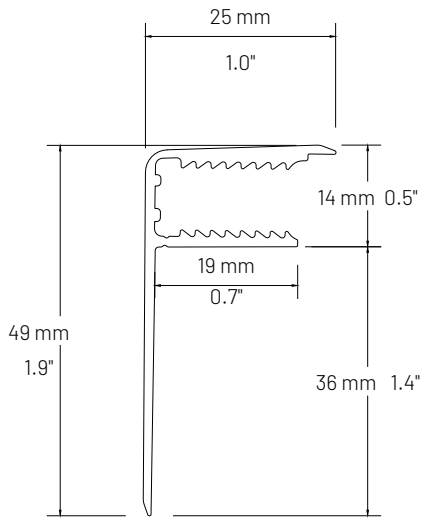

Aluminium universal trim profile
Scale 1:1

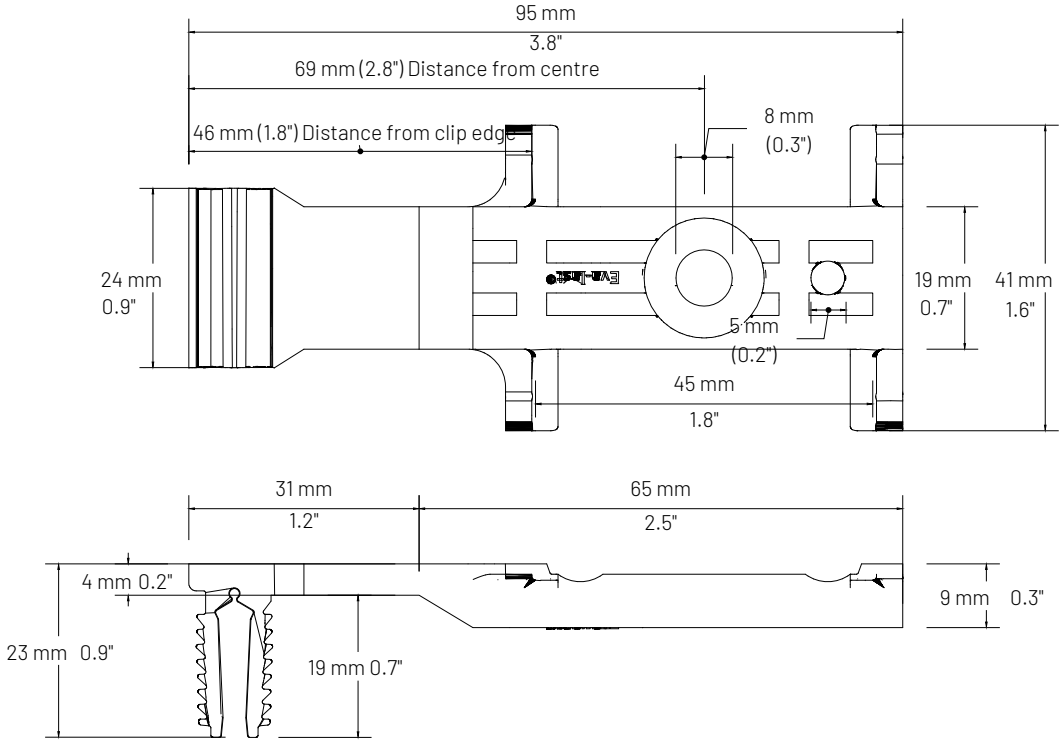

Nylon Side adaptor
Scale 1:1

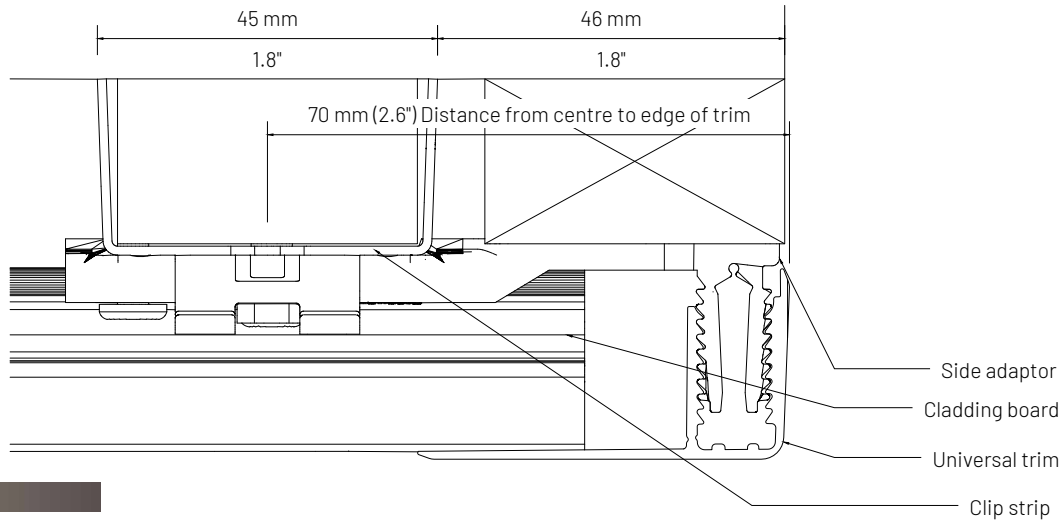

Edge assembly
Scale 1:1

Profile properties
Product code
Sectional area (mm^2)
Approximate mass (kg/m)

Sectional properties
I_x(mm^4)
I_y(mm^4)
C_x(mm)
C_y(mm)
S_x(mm^3)
S_y(mm^3)

Drawing title
Cladding trim - T trim (Butt join) application

File name
VERSION F - TDS - VistaClad Parts

File details

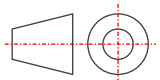

Drawing number	01
Date	December 14, 2023
Page	11 of 8
Scale	NTS

Unless otherwise specified all dimensions are in millimeters.

Issued for information. See supporting documentation for disclaimers and details.

VistaClad
Cladding inspired by nature

A PRODUCT BY EVA-LAST
INSPIRED BY NATURE, DESIGNED FOR LIFE.

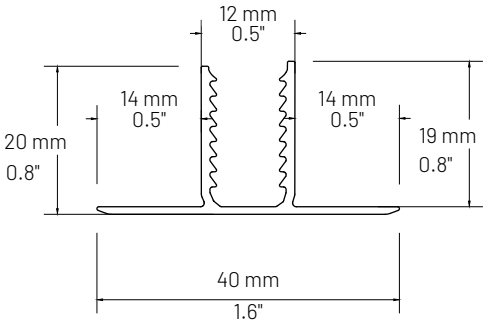

Aluminium T trim profile
Scale 1:1

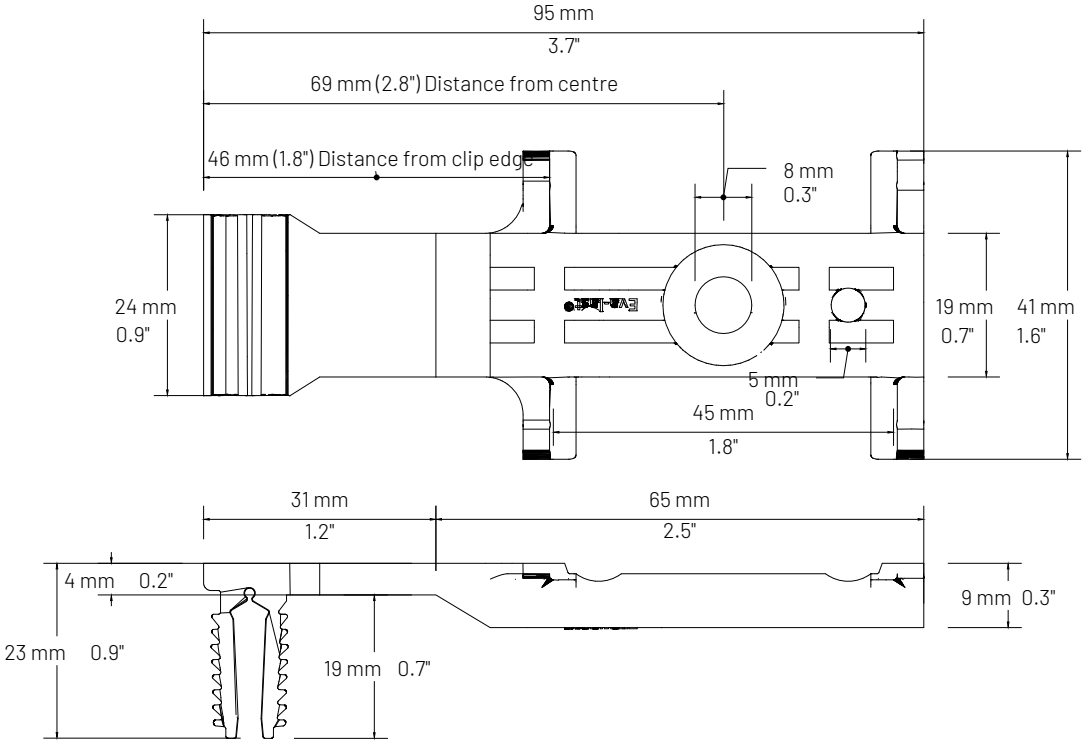

Nylon Side adaptor
Scale 1:1

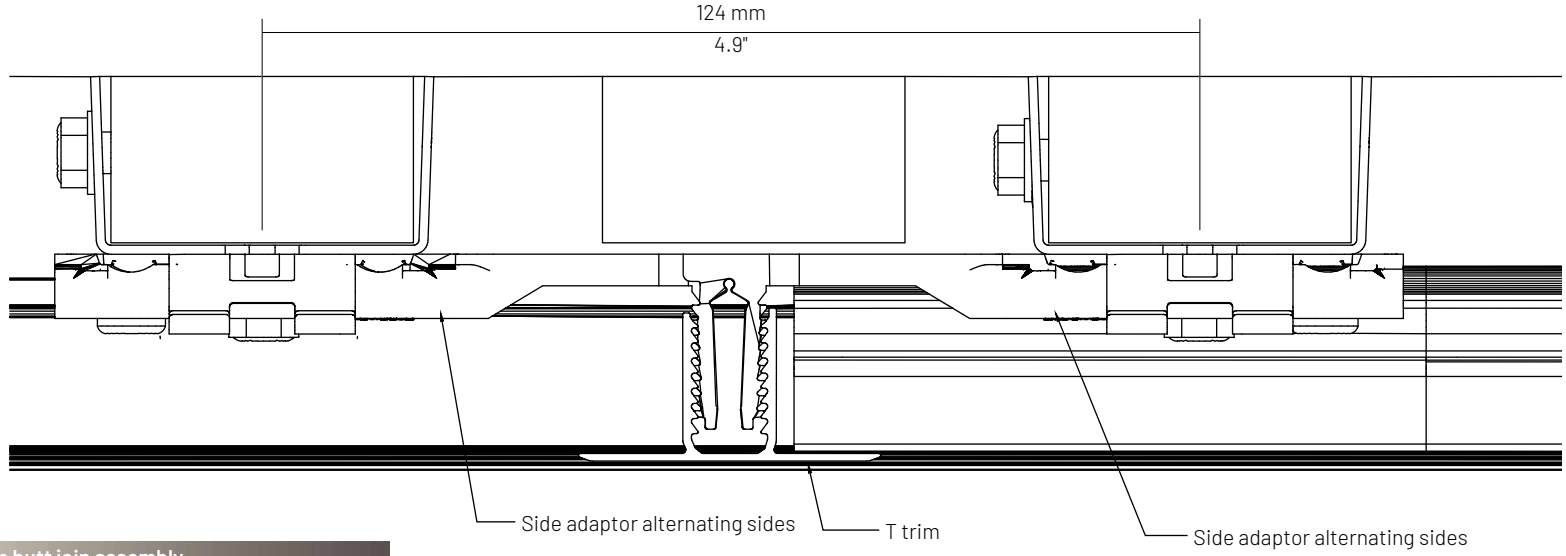

T trim butt join assembly
Scale 1:1

17/03/2025

Profile properties
Product code
Sectional area (mm^2)
Approximate mass (kg/m)

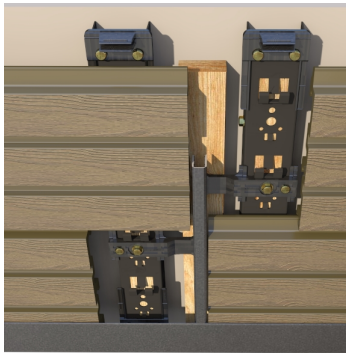

Sectional properties
I_x (mm^4)
I_y (mm^4)
C_x (mm)
C_y (mm)
S_x (mm^3)
S_y (mm^3)

Drawing title
Cladding trim - U trim (Butt join) application

File name
VERSION F - TDS - VistaClad Parts

File details	
Drawing number	01
Date	December 14, 2023
Page	12 of 8
Scale	NTS

Unless otherwise specified all dimensions are in millimeters.

Issued for information. See supporting documentation for disclaimers and details.

VistaClad
Cladding inspired by nature

A PRODUCT BY EVA-LAST
INSPIRED BY NATURE, DESIGNED FOR LIFE.

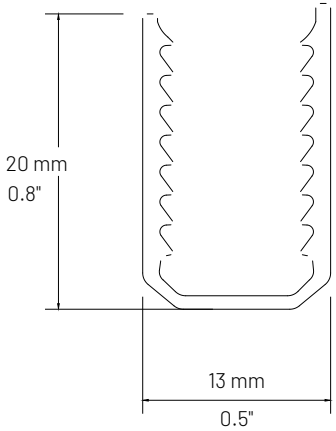

Aluminium U trim
Scale 2:1

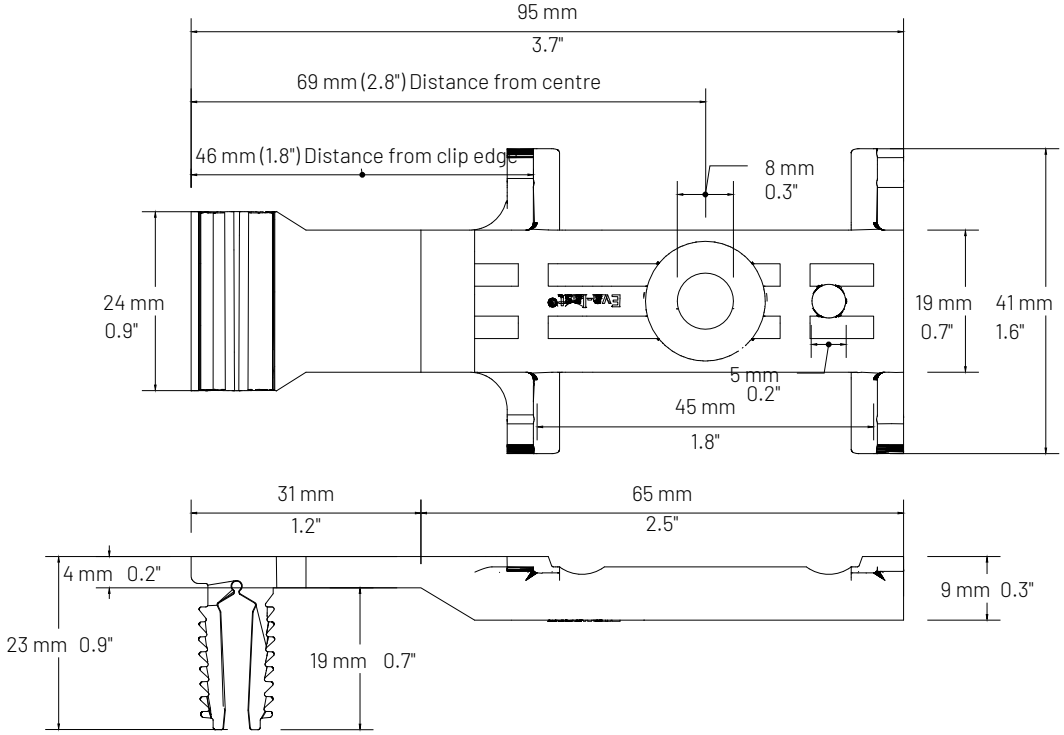

Nylon Side adaptor
Scale 1:1

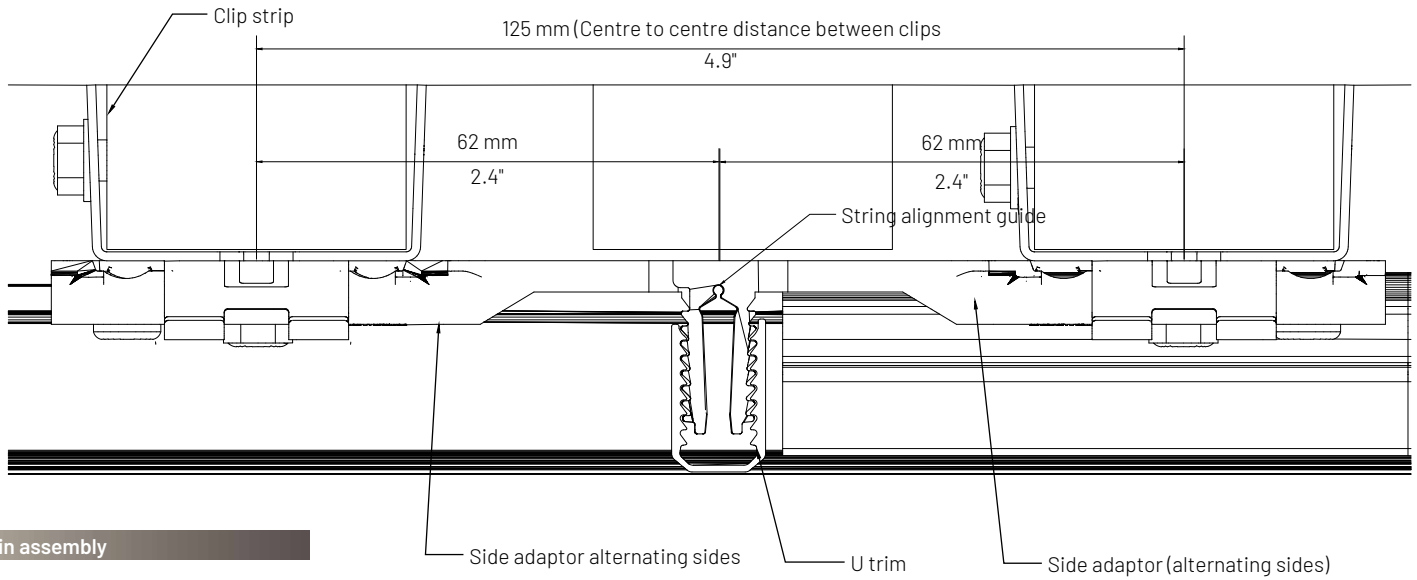

U trim butt join assembly
Scale 1:1

Profile properties
Product code
Sectional area (mm^2)
Approximate mass (kg/m)

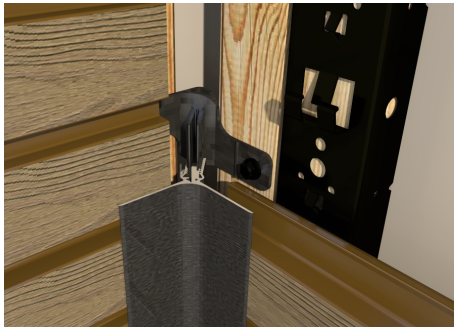

Sectional properties
I_x (mm^4)
I_y (mm^4)
C_x (mm)
C_y (mm)
S_x (mm^3)
S_y (mm^3)

Drawing title
Cladding trim - Internal corner application

File name
VERSION F - TDS - VistaClad Parts

File details	
Drawing number	01
Date	December 14, 2023
Page	13 of 8
Scale	NTS

Unless otherwise specified all dimensions are in millimeters.

Issued for information. See supporting documentation for disclaimers and details.

VistaClad
Cladding inspired by nature

A PRODUCT BY EVA-LAST
INSPIRED BY NATURE, DESIGNED FOR LIFE.

17/03/2025

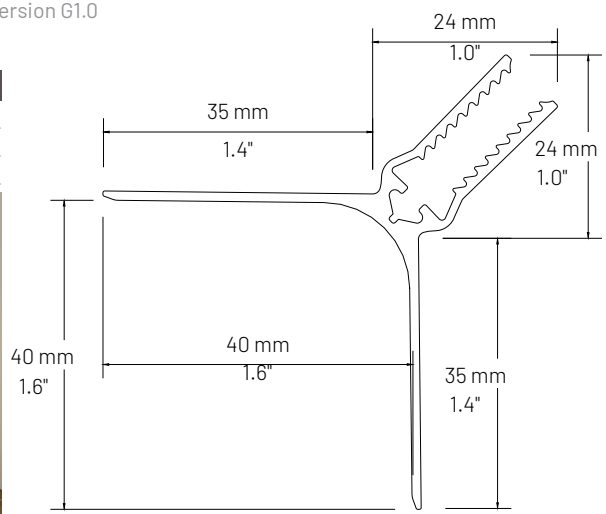

Aluminium Internal corner trim profile
Scale 1:1

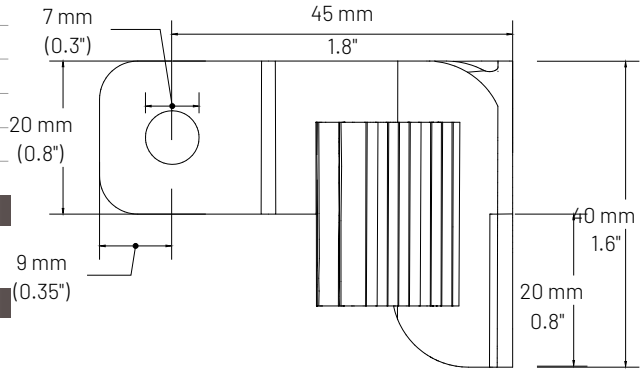

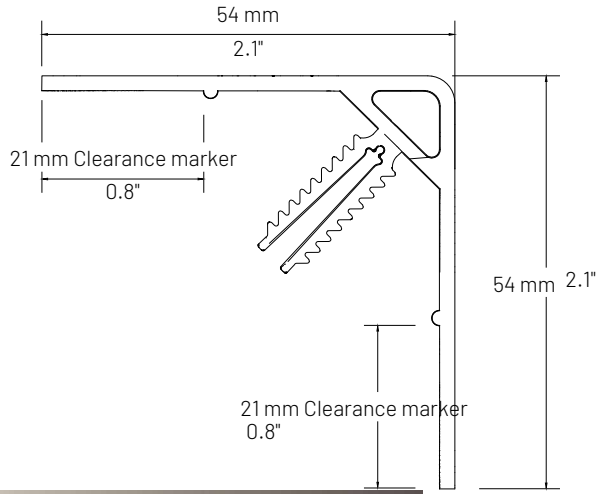

Nylon Internal corner adaptor
Scale 1:1

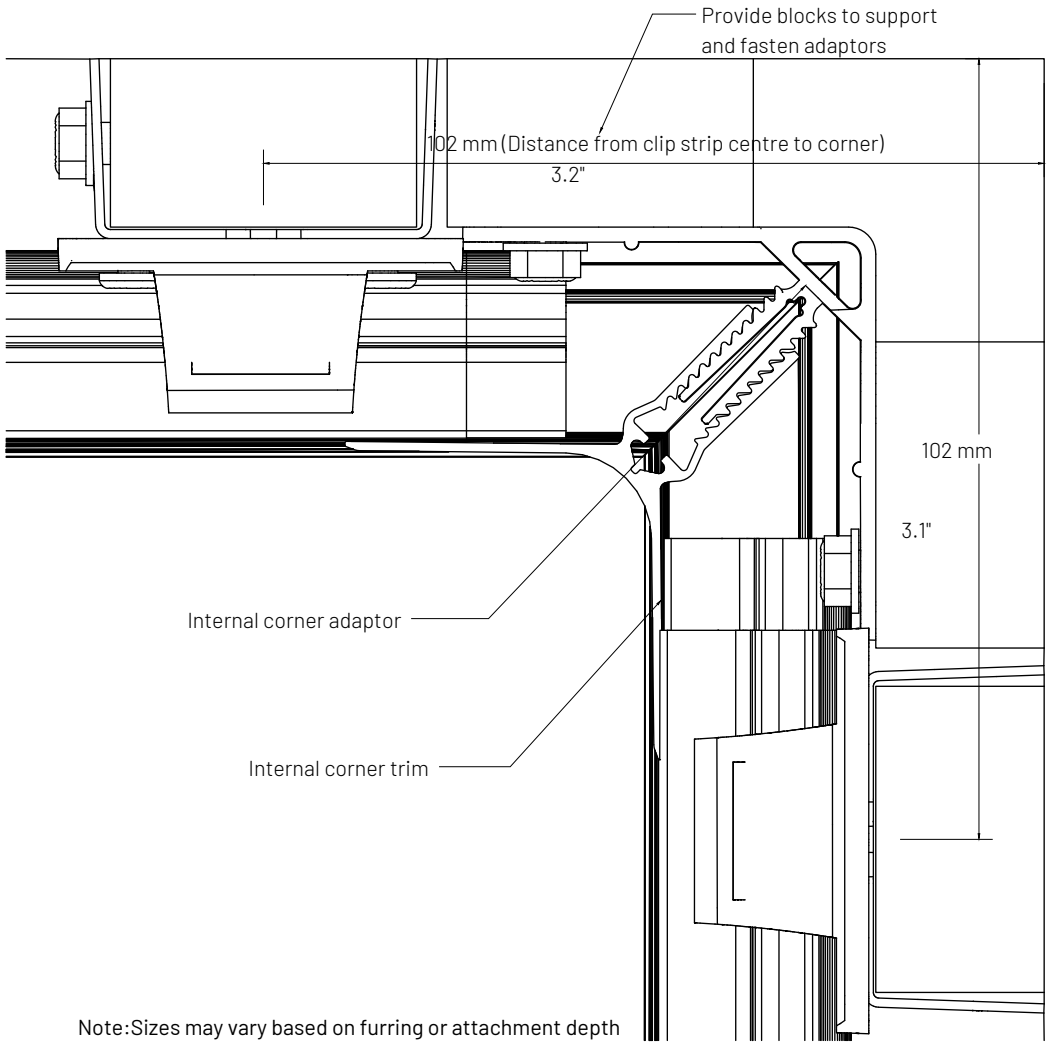

Note: Sizes may vary based on furring or attachment depth

Internal corner assembly detail
Scale 1:1

Profile properties
Product code
Sectional area (mm^2)
Approximate mass (kg/m)

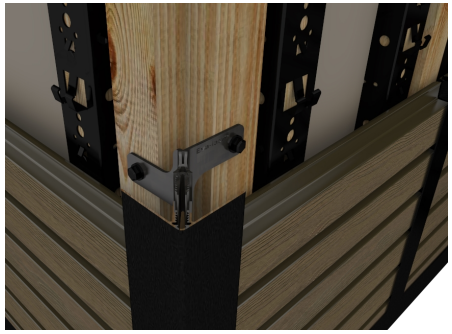

Sectional properties
I_x (mm^4)
I_y (mm^4)
C_x (mm)
C_y (mm)
S_x (mm^3)
S_y (mm^3)

Drawing title

Cladding trim - External corner application

File name

VERSION F - TDS - VistaClad Parts

File details

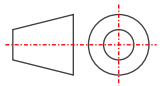

Drawing number	01
Date	December 14, 2023
Page	14 of 8
Scale	NTS

Unless otherwise specified all dimensions are in millimeters.

Issued for information. See supporting documentation for disclaimers and details.

VistaClad
Cladding inspired by nature

A PRODUCT BY EVA-LAST
INSPIRED BY NATURE, DESIGNED FOR LIFE.

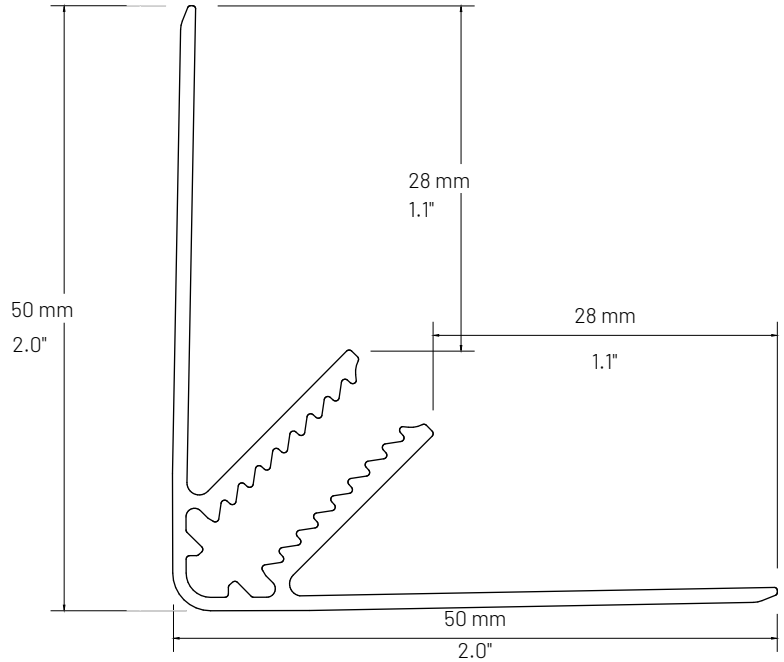

Aluminium External corner trim profile

Scale 1:1

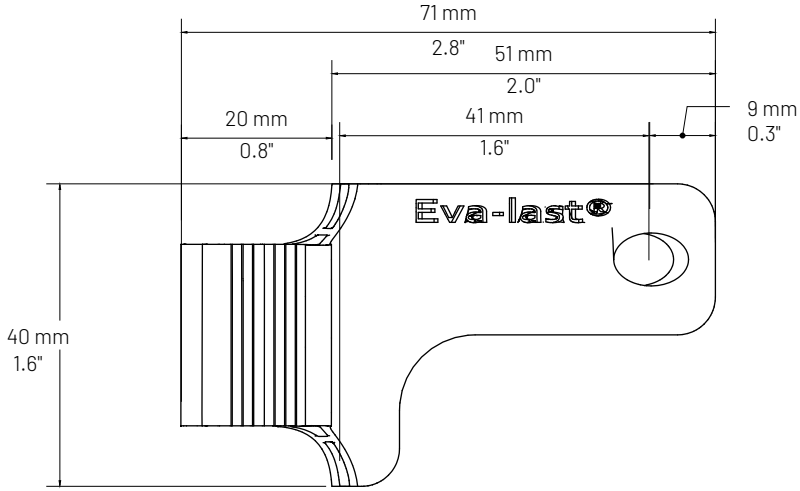

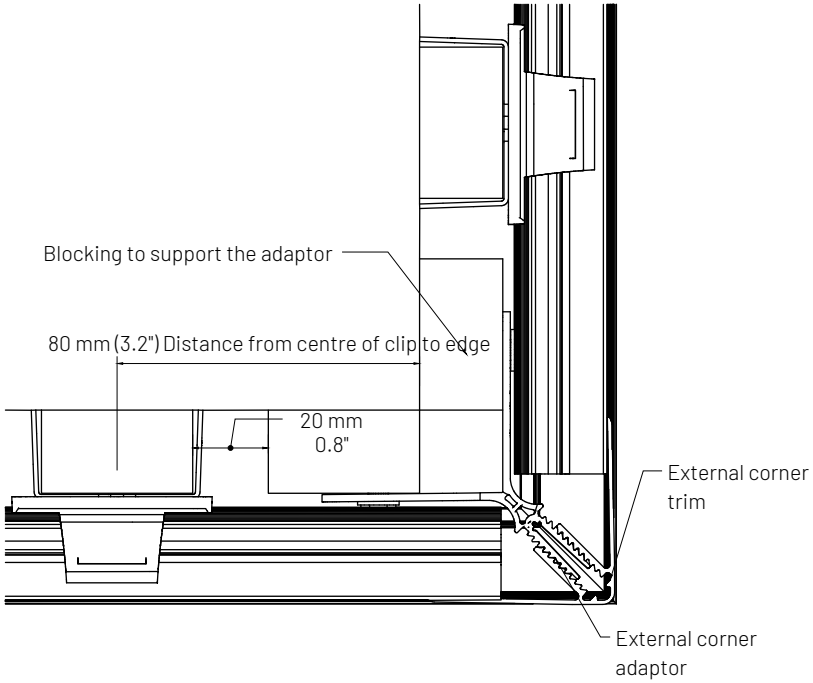

External corner assembly detail

Scale 1:1

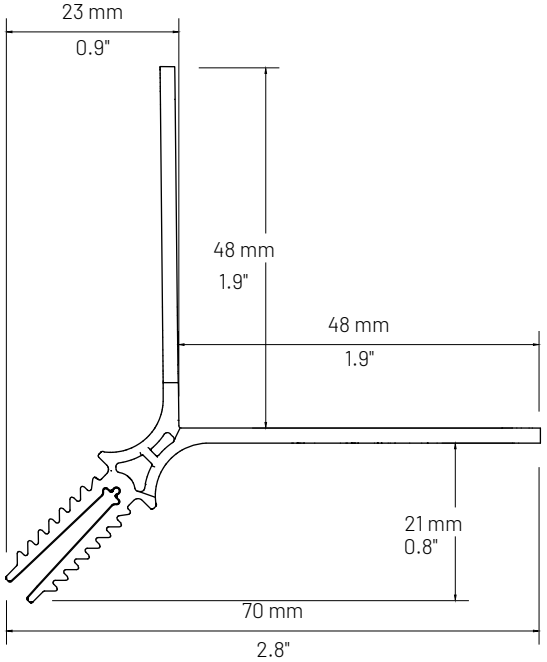

Nylon External corner adaptor

Scale 1:1

Appendix C

Material compatibility

The following information provides a list of substances that may negatively impact that Infinity cap material. Below is an extensive (not complete) list of common substances and solutions known to influence the surface of cap on Infinity. It is important to check material compatibility when choosing chemicals that the product may encounter, as they may prematurely degrade the product, these may include ingredients in cleaning products, pool additives and even oils and saps from local vegetation.

Symbol legend

The symbols and abbreviations used have the following meanings:

+ = Resistant over a period of months to years.

0 = Limited resistance: some swelling, solvation or environmental stress cracking is possible.

- = Not resistant: severe swelling, decomposition, solvation or environmental stress cracking.

soln. = Saturated aqueous solution.

Resistance definition

Good resistance: Water, aqueous salt solutions, detergent solutions, dilute acids, and alkalis.

Limited resistance: Alcohols, aliphatic hydrocarbons, oils, and fats.

Not resistant: Concentrated mineral acids, aromatic and/or halogenated hydrocarbons, esters, ethers, ketones.

Solvents: Examples are methyl ethyl ketone, tetrahydrofuran, toluene, dimethyl-formamide.

Source data:

BASF – Chemical resistance of styrene co-polymers - www.basf.de/plastics

REAGENT	CONC.	LDPE		HDPE	
		70°	140°	70°	140°
Acetone		o	-	o	
Acetaldehyde*	100%	o	-	o	
Acetic Acid*	10%	+	+	+	
Acetic Acid*	60%	+	o	+	
Acetic Anhydride*		-	-	-	
Air		+	+	+	
Aluminium Chloride	all conc	+	+	+	
Aluminium Fluoride	all conc	+	+	+	
Aluminium Sulphate	all conc	+	+	+	
Alums	all types	+	+	+	
Ammonia	100% dry gas	+	+	+	
Ammonium Carbonate		+	+	+	
Ammonium Chloride	sat'd	+	+	+	
Ammonium Fluoride	sat'd	+	+	+	
Ammonium Hydroxide	10%	+	+	+	
Ammonium Hydroxide	28%	+	+	+	
Ammonium Nitrate	sat'd	+	+	+	
Ammonium Persulphate	sat'd	+	+	+	
Ammonium Sulphate	sat'd	+	+	+	
Ammonium Metaphosphate	sat'd	+	+	+	
Ammonium Sulfide	sat'd	+	+	+	

REAGENT	CONC.	LDPE		HDPE	
		70°	140°	70°	140°
Amyl Acetate#*	100%	-	-	-	
Amyl Alcohol#*	100%	+	+	+	
Amyl Chloride#	100%	-	-	-	
Aniline#*	100%	+	-	-	
Aqua Regia+		-	-	-	
Arsenic Acid	all conc	+	+	+	
Aromatic Hydrocarbons#*		-	-	-	
Ascorbic Acid	10%	+	+	+	
Barium Carbonate	sat'd	+	+	+	
Barium Chloride	sat'd	+	+	+	
Barium Hydroxide		+	+	+	
Barium Sulphate	sat'd	+	+	+	
Barium Sulphide	sat'd	+	+	+	
Beer		+	+	+	+
Benzene#*		-	-	-	-
Benzoic Acid	all conc	+	+	+	+
Bismuth Carbonate	sat'd	+	+	+	+
Bleach Lye	10%	+	+	+	+
Borax	sat'd	+	+	+	+
Boric Acid	all conc	+	+	+	+

REAGENT	CONC.	LDPE		HDPE	
		70°	140°	70°	140°
Boron Trifluoride		+	+	+	+
Brine		+	+	+	+
Bromine+	liquid	-	-	-	-
Bromine Water#	sat'd	-	-	-	-
Butanediol*	10%	+	+	+	+
Butanediol*	60%	+	+	+	+
Butanediol*	100%	+	+	+	+
Butter*		+	+	+	+
n-Butyl Acetate#*	100%	o	-	+	o
n-Butyl Alcohol*	100%	+	+	+	+
Butyric Acid#	conc	-	-	-	-
Calcium Bisulphide		+	+	+	+
Calcium Carbonate	sat'd	+	+	+	+
Calcium Chlorate	sat'd	+	+	+	+
Calcium Chloride	sat'd	+	+	+	+
Calcium Hydroxide	conc	+	+	+	+
Calcium Hypochloride	bleach sol	+	+	+	+
Calcium Nitrate	50%	+	+	+	+
Calcium Oxide	sat'd	+	+	+	+
Calcium Sulphate		+	+	+	+
Camphor Oil#*		-	-	o	-
Carbon Dioxide	all conc	+	+	+	+
Carbon Disulphide		-	-	-	-
Carbon Monoxide		+	+	+	+
Carbon Tetrachloride#		-	-	o	-
Carbonic Acid		+	+	+	+
Castor Oil*	conc	+	+	+	+
Chlorine+	100% dry gas	o	-	-	-
Chlorine Liquid+		-	-	-	-
Chlorine Water+	2% sat'd sol	+	+	+	+
Chlorobenzene#*		-	-	-	-
Chloroform*#		-	-	o	-
Chlorosulphonic Acid	100%	-	-	-	-
Chrome Alum	sat'd	+	+	+	+
Chromic Acid	80%	-	-	-	
Chromic Acid	50%	+	o	+	
Chromic Acid	10%	+	+	+	
Cider*		+	+	+	
Citric Acid*	sat'd	+	+	+	
Coconut Oil Alcohols*		+	+	+	
Coffee		+	+	+	
Cola Concentrate*		+	+	+	
Copper Chloride	sat'd	+	+	+	

REAGENT	CONC.	LDPE		HDPE	
		70°	140°	70°	140°
Copper Cyanide	sat'd	+	+	+	
Copper Fluoride	2%	+	+	+	
Copper Nitrate	sat'd	+	+	+	
Copper Sulphate	sat'd	+	+	+	
Corn Oil*		+	+	+	
Cottonseed Oil*		+	+	+	
Cuprous Chloride	sat'd	+	+	+	
Detergents Synthetic*		+	+	+	
Developers Photographic		+	+	+	
Dextrin	sat'd	+	+	+	
Dextrose	sat'd	+	+	+	
Diazo Salts		+	+	+	
Dibutylphthalate*		o	o	o	
Dichlorobenzene#*		-	-	-	
Diethyl Ketone#*		o	-	o	
Diethylene Glycol*		+	+	+	
Diglycolic Acid*		+	+	+	
Dimethylamine		-	-	-	
Disodium Phosphate		+	+	o	
Emulsions, Photographic*		+	+	+	
Ethyl Acetate#*	100%	o	-	o	
Ethyl Alcohol*	100%	+	+	+	
Ethyl Alcohol*	35%	+	+	+	
Ethyl Benzene#*		-	-	-	
Ethyl Chloride#		-	-	-	
Ethyl Ether#		-	-	-	
Ethylene Chloride#*		-	-	-	
Ethylene Glycol*		+	+	+	
Fatty Acids*		+	+	+	
Ferric Chloride	sat'd	+	+	+	
Ferric Nitrate	sat'd	+	+	+	+
Ferrous Chloride	sat'd	+	+	+	+
Ferrous Sulphate		+	+	+	+
Fish Solubles*		+	+	+	+
Fluoboric Acid		+	+	+	+
Fluosillcic Acid	conc	+	o	+	o
Fluosillcic Acid	32%	+	+	+	+
Formic Acid	all conc	+	+	+	+
Fructose	d	+	+	+	+

REAGENT	CONC.	LDPE		HDPE	
		70°	140°	70°	140°
Fruit Pulp*		+	+	+	+
Furtural#	100%	-	-	o	-
Furturyl Alcohol#*		-	-	o	-
Gallic Acid*		+	+	+	+
Gasoline#*		-	-	o	o
Glucose		+	+	+	+
Glycerine*		+	+	+	+
Glycol*		+	+	+	+
Glycolic Acid*	30%	+	+	+	+
Grape Sugar		+	+	+	+
n-Heptane#*		-	-	o	o
Hexachlorobenzene		+	+	+	-
Hexanol Tertiary*		+	+	+	+
Hydrobromic Acid	50%	+	+	+	+
Hydrochloric Acid	all conc	+	+	+	+
Hydrocyanic Acid	sat'd	+	+	+	+
Hydrofluoric Acid*	60%	+	+	+	+
Hydrogen		+	+	+	+
Hydrogen Chloride	dry gas	+	+	+	+
Hydrogen Peroxide	30%	+	+	+	+
Hydrogen Peroxide	10%	+	+	+	+
Hydrogen Sulphide		+	+	+	+
Hydroquinone		+	+	+	+
Hypochlorous Acid conc.	conc.	+	+	+	+
Inks*		+	+	+	+
Iodine+ in KI sol'n	in KIsol'd	o	-	o	
Isopropyl Alcohol	100%	-	-	-	
Lead Acetate	sat'd	+	+	+	
Lead Nitrate		+	+	+	
Lactic Acid*	20%	+	+	+	
Linseed Oil*	100%	o	-	o	
Magnesium Carbonate	sat'd	+	+	+	
Magnesium Chloride	sat'd	+	+	+	
Magnesium Hydroxide	sat'd	+	+	+	
Magnesium Nitrate	sat'd	+	+	+	
Magnesium Sulphate	sat'd	+	+	+	
Mercuric Chloride	40%	+	+	+	
Mercuric Cyanide	sat'd	+	+	+	
Mercury		+	+	+	
Methyl Alcohol*	100%	+	+	+	
Methylethyl Ketone#*	100%	o	-	o	

REAGENT	CONC.	LDPE		HDPE	
		70°	140°	70°	140°
Methylene Chloride#*	100%	-	-	o	
Milk		+	+	+	
Mineral Oils#		o	-	o	
Molasses		+	+	+	
Naphtha#*		o	-	o	
Naphthalene#*		-	-	o	
Nickel Chloride	conc	+	+	+	
Nickel Nitrate	sat'd	+	+	+	
Nickel Sulphate	conc	+	+	+	
Nicotine*	dilute	+	+	+	
Nitric Acid	0-30%	+	+	+	
Nitric Acid+	30-50%	+	o	+	
Nitric Acid+	70%	+	o	+	
Nitric Acid+	95-98%	-	-	-	
Nitrobenzene#*	100%	-	-	-	
n-Octane		+	+	+	
Oleic Acid		o	-	o	
Oxalic Acid*	sat'd	+	+	+	
Perchloroethylene#		-	-	-	
Phosphoric Acid	95%	+	o	+	
Photographic Solutions		+	+	+	
Plating Solutions*					
Brass		+	+	+	+
Cadmium		+	+	+	+
Chromium		+	+	+	+
Copper		+	+	+	+
Gold		+	+	+	+
Indium		+	+	+	+
Lead		+	+	+	+
Nickel		+	+	+	+
Rhodium		+	+	+	+
Sliver		+	+	+	+
Tin		+	+	+	+
Zinc		+	+	+	+
Potassium Bicarbonate	sat'd	+	+	+	+
Potassium Bromide	sat'd	+	+	+	+

REAGENT	CONC.	LDPE		HDPE	
		70°	140°	70°	140°
Potassium Bromate	10%	+	+	+	+
Potassium Carbonate		+	+	+	+
Potassium Chlorate	sat'd	+	+	+	+
Potassium Chloride	sat'd	+	+	+	+
Potassium Chromate	40%	+	+	+	+
Potassium Cyanide	sat'd	+	+	+	+
Potassium Dichromate	40%	+	+	+	+
Potassium Ferri/Ferro	Ferro				
Cyanide	sat'd	+	+	+	+
Potassium Fluoride		+	+	+	+
Potassium Hydroxide	conc	+	+	+	+
Potassium Nitrate	sat'd	+	+	+	+
Potassium Perborate	sat'd	+	+	+	+
Potassium Perchlorate	10%	+	+	+	+
Potassium Permanganate	20%	+	+	+	+
Potassium Persulphate	sat'd	+	+	+	+
Potassium Sulphate	conc	+	+	+	+
Potassium Sulphide	conc	+	+	+	+
Potassium Sulphite	Conc100%	+	+	+	+
Propargyl Alcohol*		+	+	+	+
n-Propyl Alcohol*		+	+	+	+
Propylene Dichloride#*		-	-	-	-
Propylene GlyCol*	sat'd	+	+	+	+
Pyridine*		+	-	+	-
Resorcinol		+	+	+	+
Salicylic Acid	sat'd	+	+	+	+
Sea Water		+	+	+	+
Selenic Acid Shortening*	any conc	+	+	+	+
Sliver Nitrate Sol'n		+	+	+	+
Soap Solutions*	any conc	+	+	+	+
Sodium Acetate	sat'd	+	+	+	+
Sodium Benzoate	35%	+	+	+	+
Sodium Biscarbonate	sat'd	+	+	+	+
Sodium Bisulphate	sat'd	+	+	+	+
Sodium Bisulphite	sat'd	+	+	+	+
Sodium Borate	dilute	+	+	+	+
Sodium Bromide	dilute	+	+	+	+
Sodium Carbonate	conc	+	+	+	+
Sodium Chlorate	sat'd	+	+	+	+
Sodium Chloride	sat'd	+	+	+	+
Sodium Cyanide	sat'd	+	+	+	+
Sodium Dichromate	sat'd	+	+	+	+